Ahmed Samir Megaly
Your Way For Excellence

أدعية المذاكرة

دعاء قبل المذاكرة:
اللهم انى أسألك فهم النبيين وحفظ الملائكة المقربين اللهم اجعل لسانى عامرا بذكرك وقلبى بخشيتك وسرى بطاعتك انك على كل شيء قدير وحسبنا الله ونعم الوكيل.

ادعية اخرى تعين على تيسير المذاكرة:
رب اشرح لى صدرى ويسر لى امرى واحلل عقدة من لسانى يفقهوا قولى.
اللهم لا سهل الا ما جعلته سهلا وأنت تجعل الحزن ما شئت سهلا.
ربنا آتنا من لدنك رحمة وهيئ لنا من أمرنا رشدا.

دعاء بعد المذاكرة:
اللهم انى استودعك ما قرأت وما حفظت وما فهمت فرده عند حاجتى اليه انك على كل شىء قدير وحسبنا الله ونعم الوكيل.

عند التوجه للامتحان:
اللهم انى توكلت عليك وسلمت امرى اليك لا ملجأ ولا منجى منك الا اليك.

عند الدخول للجنة الامتحان:
رب ادخلنى مدخل صدق واخرجنى مخرج صدق واجعل لى من لدنك سلطانا نصيرا.

عند بداية الاجابة:
رب اشرح لى صدرى ويسر لى امرى وأحلل عقدة من لسانى يفقهوا قولى
بسم الله الفاتح..اللهم لا سهل الا ما جعلته سهلا يا أرحم الراحمين.

عند تعسر الاجابة:
لا اله الا انت سبحانك انى كنت من الظالمين يا حي يا قيوم برحمتك أستغيث.رب انى مسنى الضر وأنت ارحم الراحمين.

عند النسيان :
اللهم يا جامع الناس ليوم لا ريب فيه اجمع على ضالتى.

عند النهايه:
الحمد لله الذى هدانا لهذا وما كنا لنهتدى لولا ان هدانا الله.

01283589168
01115170024
Eng. Ahmed Samir Megaly

Units

$Cm \xrightarrow{\times 10^{-2}} m$

$Cm^2 \xrightarrow{\times (10^{-2})^2 = \times 10^{-4}} m^2$

$Cm^3 \xrightarrow{\times (10^{-2})^3 = \times 10^{-6}} m^3$

$mm \xrightarrow{\times 10^{-3}} m$

$mm^2 \xrightarrow{\times (10^{-3})^2 = \times 10^{-6}} m^2$

$mm^3 \xrightarrow{\times (10^{-3})^3 = \times 10^{-9}} m^3$

$Liter \xrightarrow{\times 10^{-3}} m^3$

$Angstrom \xrightarrow{\times 10^{-10}} m$

$gm \xrightarrow{\times 10^{-3}} Kg$

$eV \xrightarrow{\times 1.6 \times 10^{-19}} Joule$

Tera	T	$\times 10^{12}$
Giga	G	$\times 10^{9}$
Mega	M	$\times 10^{6}$
Kilo	K	$\times 10^{3}$
Deci	d	$\times 10^{-1}$
Centi	c	$\times 10^{-2}$
Milli	m	$\times 10^{-3}$
Micro	μ	$\times 10^{-6}$
Nano	n	$\times 10^{-9}$
Pico	p	$\times 10^{-12}$
Femto	f	$\times 10^{-15}$
Angstrom	A°	$\times 10^{-10}$

	Area	Circumference
Circle	πr^2	$2 \pi r$
Rectangle	Length × Width	2 × (Length + Width)
Square	L^2	4 L
Area of Sphere = $4 \pi r^2$		Volume of Sphere = $\frac{4}{3} \pi r^3$
		Volume of Cylinder = $\pi r^2 h$
F = m × a		energy = F × d
Power = $\frac{energy}{time}$		

$$\sin(\theta) = \frac{\text{Opposite}}{\text{Hypotenous}}$$

$$\cos(\theta) = \frac{\text{Adjacent}}{\text{Hypotenous}}$$

$$\tan(\theta) = \frac{\text{Opposite}}{\text{Adjacent}}$$

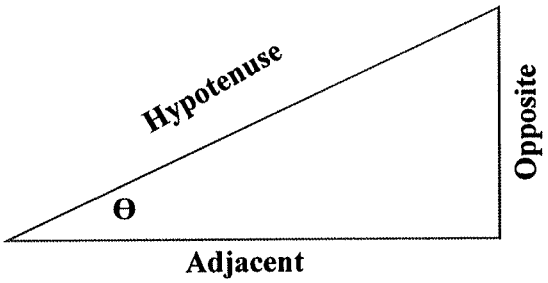

01283589168
01115170024

Eng. Ahmed Samir Megaly

CHAPTER (1)

Electrical Current and Ohm's Law

The Electric Current: It is a flow of electric charge in a conducting material.

Conventional (Traditional) Current Direction	Actual (Electron) Current Direction
The direction of the electric current always goes from the positive terminal to the negative terminal outside the source into a closed electric circuit.	The direction of flow of electrons always goes from the negative terminal to the positive terminal outside the source into a closed electric circuit. (Opposite to conventional current).
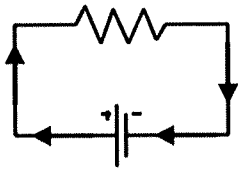 In our Course we deal with this direction	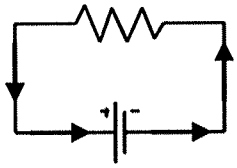

Note:

In a conductor if we say that the electrons flow in a certain direction, so the current (I) we use is in the opposite direction.

Current (I) direction we use in problems

Direction of flow of electrons

Basic Definitions

1. Electric Current Intensity: (I)

It's the quantity of electric charges (Q) in coulombs passing through a given cross sectional area of a conductor in one second.

$$I = \frac{Q}{t} = \frac{n \times e}{t} \rightarrow (1)$$

Where:

I ≡ Electric current intensity passing through the conductor (Ampere = A = C/Sec.)

Q ≡ Quantity of electric charges (Coulomb = C)

t ≡ Time (Second)

n ≡ Number of electrons

e ≡ Charge of one electron = Constant = 1.6×10^{-19} Coulomb

Ampere:
It is the current intensity through a circuit when a charge of one coulomb passed in a given cross sectional area in one second.

Coulomb:
It is the quantity of electric charge passes in a given cross sectional area of a circuit in one second when the electric current intensity is one ampere.

2. Potential Difference Between Two Points: (V)

It's the work done in joules to transfer a charge of one coulomb from one point to the other.

$$V = \frac{W}{Q} \rightarrow (2)$$

Where:

V ≡ Potential difference between two points (Volt = V = J/C)

W ≡ Work required to transfer charges (Joule = J = N.m = $\frac{Kg.\ m^2}{Sec^2}$)

Q ≡ Quantity of electric charges (Coulomb = C)

Volt:
It is the potential difference between two points when the work done to transfer a charge of one coulomb between them is one joule.

3. The Electric Resistance of a conductor: (R)

It's the opposition of the conductor to the flow of electric current.

OR: **It's the ratio between the potential difference across the conductor terminals and the current intensity passing through it.**

$$R = \frac{V}{I}$$

Where:

R ≡ Electric resistance of conductor (Ohm = Ω = V/A)

V ≡ Potential difference across the conductor terminal (Volt = V = J/C = $\frac{N.m}{C}$)

I ≡ Electric current intensity passing through the conductor (Ampere = A = C/Sec.)

Ohm:
Is the electric resistance of a conductor when 1 volt is the potential difference between its terminals, so a current of 1 ampere passing through it.

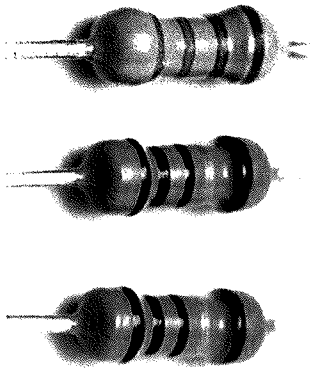

Fixed Resistance

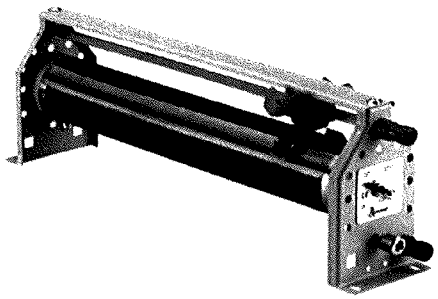

Rheostat (Variable Resistance)

Factors affecting the electric resistance of a conductor:

1. **The length of the conductor (L).**

   $R \propto L$ at constant A, Kind of material and Temperature , So $\frac{R_1}{R_2} = \frac{L_1}{L_2}$

2. **The cross sectional area of the conductor (A).**

   $R \propto \frac{1}{A}$ at constant L, Kind of material and Temperature , So $\frac{R_1}{R_2} = \frac{A_2}{A_1}$

3. **Kind of material.**
4. **Temperature.**

   As temperature increases, the resistance of conductor increases.

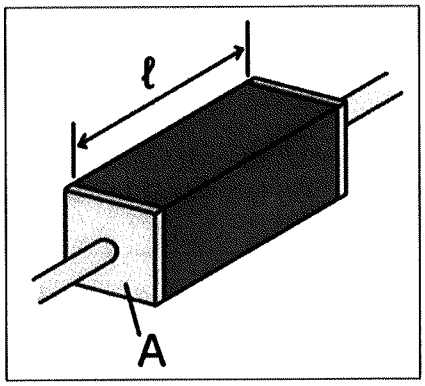

$\because R \propto L$ & $R \propto \frac{1}{A}$ $\therefore R \propto \frac{L}{A}$

$$R = \rho_e \frac{L}{A} \rightarrow (3)$$

Where:

R ≡ Electric resistance of conductor (Ohm = Ω = V/A)

ρ_e ≡ Electric resistivity of conductor's material or Specific resistance ($\Omega.m = \frac{V}{A}.m$)

L ≡ Length of conductor (m)

A ≡ Cross section area of conductor (m^2)

So for problems, we use the following formula:

$$\frac{R_1}{R_2} = \frac{\rho_1 L_1 A_2}{\rho_2 L_2 A_1} = \frac{\rho_1 L_1 r_2^2}{\rho_2 L_2 r_1^2} \rightarrow (4)$$

Where most of the problems, circular cross section area conductors are used. ($A = \pi r^2$)

4. The Electric Resistivity of a material (Specific Resistance): (ρ_e)

It's the resistance of a conductor of unit length and unit cross sectional area.

It is a physical property of the material.

Factors affecting the electric resistivity of a material:

1. **Kind of material.**
2. **Temperature.**
   As temperature increases, the resistivity of material increases.

5. The Electric Conductivity of a material: (σ)

It's the reciprocal (inverse) of the resistivity.

$$\boxed{\sigma = \frac{1}{\rho_e} = \frac{L}{RA}} \rightarrow (5)$$

Where:

$\sigma \equiv$ Electric conductivity of material ($\Omega^{-1}.m^{-1}$ = Simon.m^{-1} = $\frac{A}{V}.m^{-1}$)

$\rho_e \equiv$ Electric resistivity of conductor's material or Specific resistance ($\Omega.m = \frac{V}{A}.m$)

It is also a physical property of the material.

Factors affecting the electric conductivity of a material:

1. **Kind of material.**
2. **Temperature.**
   As temperature increases, the conductivity of material decreases.

6. Ohm's Law:

The current intensity in a conductor is directly proportional to the potential difference across its terminals at a constant temperature

$\because V \alpha I$ at constant Temperature $\therefore \boxed{V = IR} \rightarrow (6)$

Where:

$V \equiv$ Potential difference across the conductor terminal ($V = J/C = A.\Omega = \frac{N.m}{C}$)

$R \equiv$ Electric resistance of the conductor ($Ohm = \Omega = V/A$)

$I \equiv$ Electric current intensity passing through the conductor ($A = C/Sec. = V/\Omega$)

So for a fixed resistance, as the potential difference across it increases, the current intensity passing through it increases and as the potential difference across it decreases, the current intensity passing through it decreases.

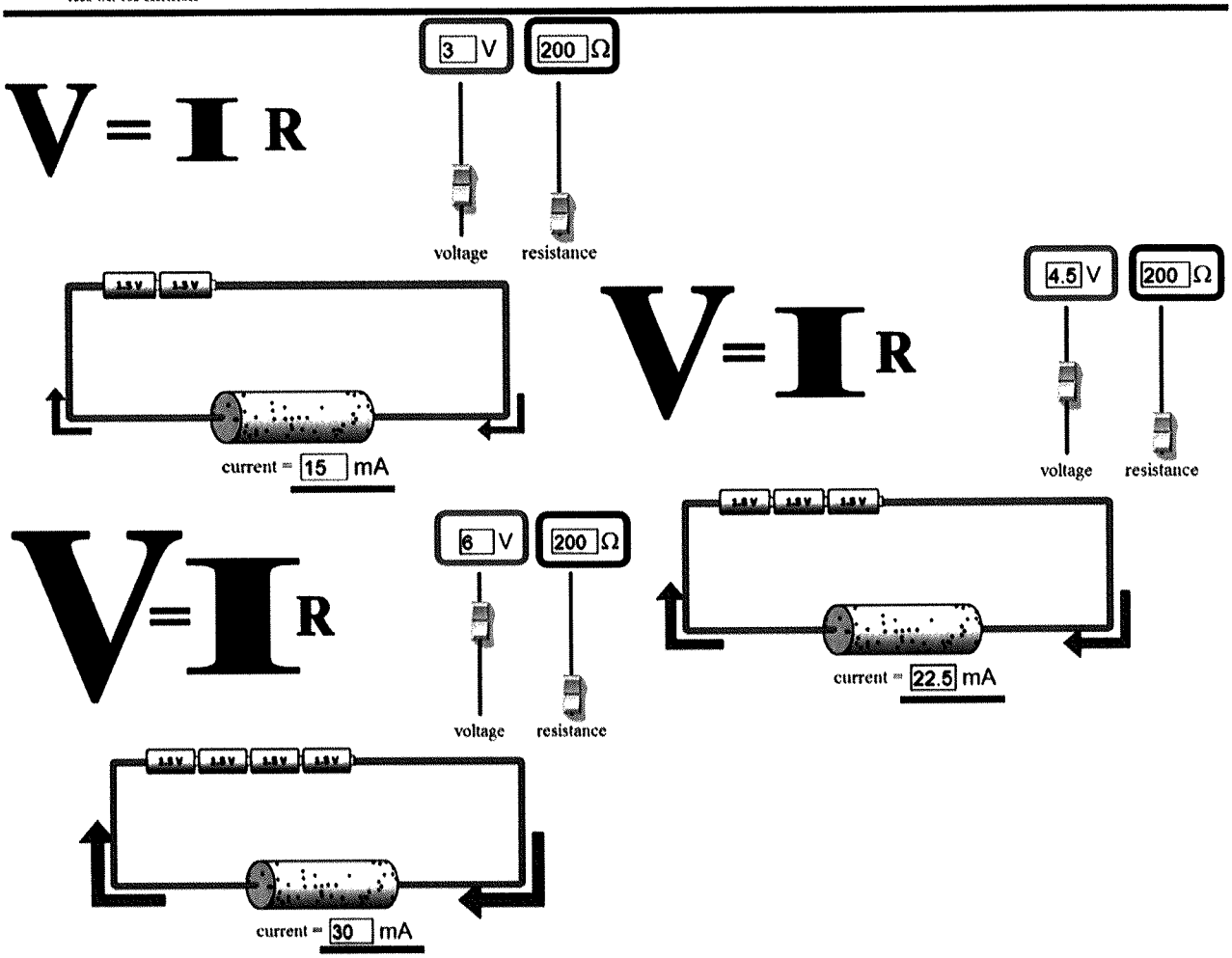

7. <u>The Electric Power: (P)</u> **It's the work done (energy consumed) in one second.**

$$\boxed{P = \frac{W}{t} = \frac{V\,Q}{t} = V\,I} \rightarrow (7)$$

Where:

P ≡ Electric power of an element (Watt =W=J/sec.= $\frac{N.m}{sec.} = \frac{Kg.m^2}{Sec^3} = V.A = A^2.\,\Omega = \frac{V^2}{\Omega}$)

W ≡ Energy consumed by the element (Joule = J = N.m = $\frac{Kg.\,m^2}{Sec^2}$)

t ≡ Time of consuming the energy (Second)

V ≡ Potential difference across the element terminal ($V = J/C = A.\Omega = \frac{Watt}{A}$)

I ≡ Electric current intensity passing through the same element ($A = V/\Omega = \frac{Watt}{V}$)

, So

For any electric element : $P = V\,I$

Special case for resistance : $\boxed{P = V\,I = I^2\,R = \frac{V^2}{R}} \rightarrow (8)$

$$W = P.\,t = V.\,I.\,t = I^2\,R\,t = \frac{V^2}{R}\,t$$

Ohm's Law for a closed circuit

We know that the emf of an electric cell (battery-source) is the total work done inside and outside the cell to transfer an electric charge of one coulomb in the electric circuit. If we denote the emf of a battery by (V_B), the total current in the circuit by (I), the external resistance by (R) and the internal resistance of the cell by (r), then

$$\because \quad V_B = IR + Ir = I\,(R + r)$$

$$\therefore \quad \boxed{I = \frac{V_B}{R + r}}$$

$$\therefore \quad V_B = V + Ir$$

$$\therefore \quad \boxed{V = V_B - Ir = IR}$$

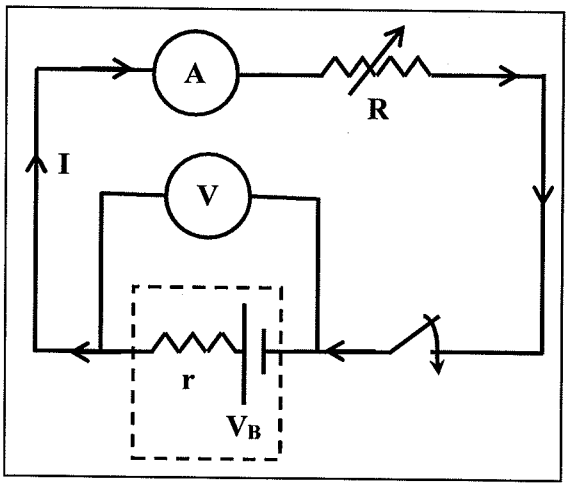

Where:

V_B ≡ Electromotive force of the battery (V = J/C = A.Ω)

V ≡ Potential difference between two poles of battery <u>or</u> battery terminal voltage <u>or</u> Voltage across the source (V = J/C = A.Ω)

I ≡ Electric current intensity passing through the circuit (A = V/Ω)

R ≡ Equivalent resistance of the circuit (Ohm = Ω = V/A)

r ≡ internal resistance of the battery (Ohm = Ω = V/A)

8. The Electromotive Force of a source: (emf or V_B)

It's the total work done to transfer a unit charge (one coulomb) throughout the circuit outside and inside the source. (Through the source and the external circuit).

<u>OR:</u> It's the potential difference between the two poles of the source when the circuit is opened (when no current passes).

Very important notes:

1. $\boxed{I = \frac{V_B}{R_{eq}+r}}$ → (9)

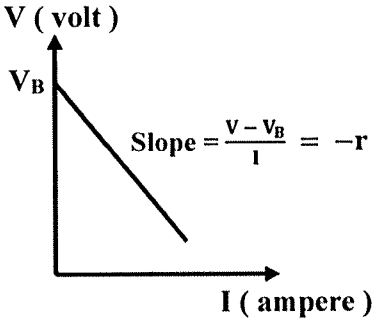

2. Voltmeter across the battery reading = battery terminal voltage =

$\boxed{V = V_B - Ir = I R_{eq}}$ → (10)

, So as $\begin{cases} R_{eq} \uparrow & I \downarrow & Ir \downarrow & \therefore V \uparrow \\ R_{eq} \downarrow & I \uparrow & Ir \uparrow & \therefore V \downarrow \end{cases}$

3. $\boxed{V = V_B}$ when $Ir = 0$ $\begin{cases} r = 0 \text{ , neglegible internal resistance} \\ I = 0 \text{ , No current flow = circuit is open} \end{cases}$

4. (Ir) is called voltage drop in the battery. (Lost voltage in the battery)

Percentage of voltage drop = $\boxed{\frac{Ir}{V_B} \times 100 = \frac{r}{R_{eq}+r} \times 100}$ → (11)

5. ($V = I R_{eq}$) is already the useful voltage for the circuit.

(الفولت اللي بتستفيد منه الدائرة الخارجية بالفعل)

6. Efficiency of the battery = $\boxed{\eta = \frac{V}{V_B} \times 100 = \frac{R_{eq}}{R_{eq}+r} \times 100}$ → (12)

As $r \downarrow$ $I \uparrow$ $Ir \downarrow$ $\therefore V \uparrow$ $\therefore$ Efficiency of battery $\uparrow$

Connection of Resistors

	Series Connection	Parallel Connection
Way of connection	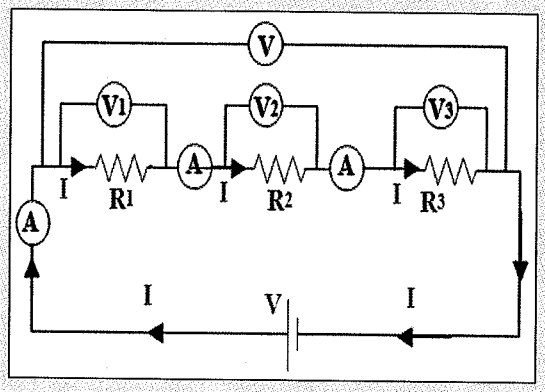	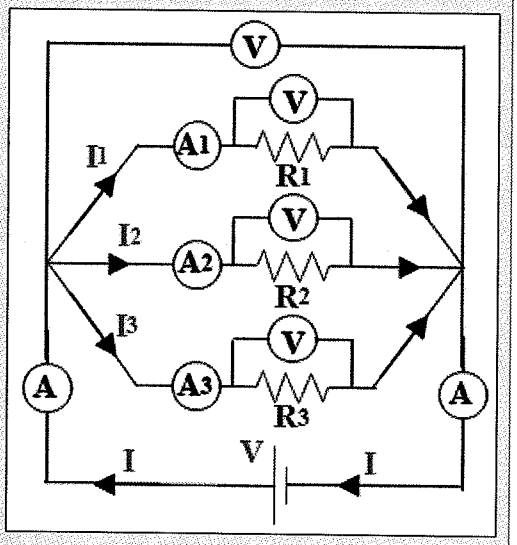
Electric Current intensity (I)	The current intensity is the same in all the resistors $I = I_1 = I_2 = I_3 = \ldots\ldots\ldots\ldots$	The total current intensity is distributed among the resistors $I = I_1 + I_2 + I_3 + \ldots\ldots\ldots\ldots$
Potential Difference (V)	The total potential difference is distributed on all the resistors $V = V_1 + V_2 + V_3 + \ldots\ldots\ldots\ldots$	The potential difference is the same on all the resistors $V = V_1 = V_2 = V_3 = \ldots\ldots\ldots\ldots$
Proof of equivalent resistance (R_{eq}) In proof must draw way of connection	$\because\ V = V_1 + V_2 + V_3$ $\therefore\ I R_{eq} = I R_1 + I R_2 + I R_3$ $\therefore\ I R_{eq} = I (R_1 + R_2 + R_3)$ $\therefore\ R_{eq} = R_1 + R_2 + R_3$ Where R_{eq} is the equivalent resistance that replace all the resistors connected in series	$\because\ I = I_1 + I_2 + I_3$ $\therefore\ \frac{V}{R_{eq}} = \frac{V}{R_1} + \frac{V}{R_2} + \frac{V}{R_3}$ $\therefore\ \frac{V}{R_{eq}} = V (\frac{1}{R_1} + \frac{1}{R_2} + \frac{1}{R_3})$ $\therefore\ \frac{1}{R_{eq}} = \frac{1}{R_1} + \frac{1}{R_2} + \frac{1}{R_3}$ Where R_{eq} is the equivalent resistance that replace all the resistors connected in parallel

Equivalent resistance (R_{eq})	$R_{eq} = R_1 + R_2 + R_3$ → (13) If N resistances are connected in series each of equal resistance (r) then: $R_{eq} = N \times r$ → (14)	$\frac{1}{R_{eq}} = \frac{1}{R_1} + \frac{1}{R_2} + \frac{1}{R_3}$ → (15) For only two resistances R_1 & R_2 : $R_{eq} = \frac{R_1 R_2}{R_1 + R_2}$ → (16) If N resistances are connected in parallel each of equal resistance (r) then: $R_{eq} = \frac{r}{N}$ → (17)
Purpose of connection	To obtain a large resistance out of a branch of small resistances	To obtain a small resistance out of a branch of large resistances
Consumed Electric Power	∵ Power consumed in each resistance : $P = I^2 R$ & ∵ I is constant in all the resistances , So $P \alpha R$ The largest resistance consumes the largest power	∵ Power consumed in each resistance : $P = \frac{V^2}{R}$ & ∵ V is constant on all the resistances , So $P \alpha \frac{1}{R}$ The smallest resistance consumes the largest power
Notes	The equivalent resistance is greater than the largest resistance	The equivalent resistance is smaller than the smallest resistance

Kirchhoff's Laws

Some circuits are too complicated to be analyzed by applying ohm's law. For such cases there are a set of relations called Kirchhoff's Laws which enable one to analyze arbitrary circuits.

Kirchhoff's First Law (Principle of conservation of electric charge):

You know that the electric current through metallic conductors is a stream of negative free electrons (electric charges) flowing from one point to another and these charges don't accumulate at any point along their path through the conductor. According to this Kirchhoff has formulated his first law (Kirchhoff's current law) as follows:

1. Kirchhoff's current law: (KCL)

At any node (junction) in an electrical circuit, the sum of the currents flowing into that node is equal to the sum of the currents flowing out of that node.

OR: The algebraic sum of electric currents meeting at a point (a node) in a closed circuit equals zero

It can be expressed mathematically as:

$$\boxed{\sum I_{\text{entering (in)}} = \sum I_{\text{leaving (out)}}} \rightarrow (18)$$

$$I_1 + I_2 + I_3 = I_4 + I_5$$

$$\boxed{\sum I_{\text{any node}} = \text{Zero}} \rightarrow (18)$$

$$I_1 + I_2 + I_3 - I_4 - I_5 = 0$$

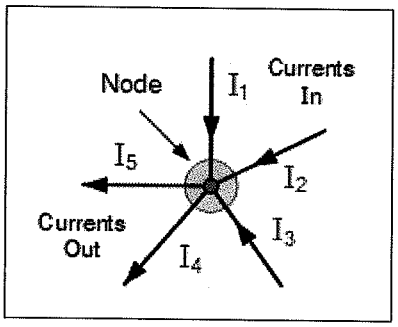

Determine the magnitude and direction of the current intensity (I) in the opposite figure:

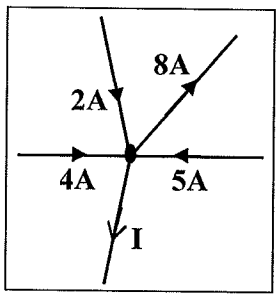

$$\sum I_{in} = 2 + 4 + 5 = 11\ A$$

$$I_{leaving} = 8\ A$$

Applying KCL: $\sum I_{in} = \sum I_{out}$

$\therefore$ I must be leaving (out) $= 11 - 8 = 3\ A$

Kirchhoff's Second Law (Principle of conservation of energy):

The electromotive force of a closed electric circuit expresses the work done or the energy required to transfer a unit electric charge once through the whole circuit.
On the other hand, the potential difference (V= IR) expresses the work done to transfer a unit electric charge across a component in the circuit.
This has been formulated by Kirchhoff in his second law (Kirchlioff's voltage law) as follows:

2. Kirchhoff's voltage law: (KVL)

The algebraic sum of the electromotive forces in any closed loop is equivalent to the algebraic sum of potential differences within that loop.

OR: The algebraic sum of the potential differences across all elements around any closed circuit loop must be zero.

It can be expressed mathematically as:

$$\boxed{\sum V_{\text{any closed loop}} = \text{Zero}} \rightarrow (19)$$

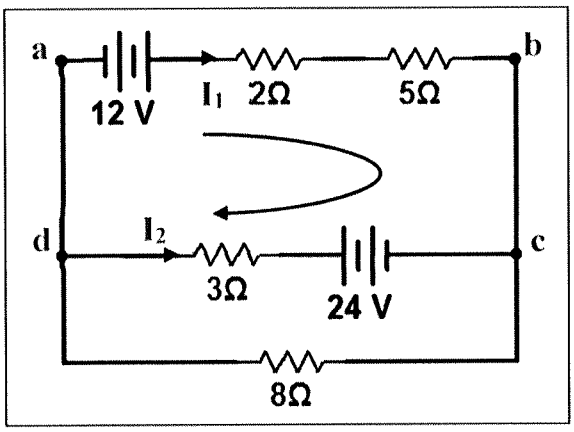

Applying KVL on loop (abcda):

$$-12 + 2I_1 + 5I_1 - 24 - 3I_2 = 0$$

$$\boxed{\sum V_{rise} = \sum V_{drop}} \rightarrow (19)$$

$$\boxed{\sum V_B = \sum I.R} \rightarrow (19)$$

$$12 + 24 = (2+5)I_1 - 3I_2$$

Very important notes:

1. **Assume a current in each branch in the circuit in any direction. If the value of calculated current is**
   - **Positive, this means that the assumed direction is correct**
   - **Negative, this means that the assumed direction is wrong and the correct direction is opposite to the assumed**
2. **KCL is applied only on the major nodes.**
3. **To apply KVL at each closed loop, we assume a direction of rotation for the loop (clockwise or anticlockwise) and this assumed direction to be the positive direction.**
4. **All the resistances are voltage drop elements (Voltage drop = IR)**
5. **Voltage sources (batteries) may be voltage drop or voltage rise elements.**
6. **During applying KVL, Don't forget the internal resistance of the battery (consider it a resistance (r) in series with the battery).**

Very very very important notes on chapter (1)

1. As the temperature increases, the amplitude of vibrations of conductor atoms increases, and moving electrons suffer more collisions with conductor atoms. Therefore motion of electrons will be more difficult and the resistance of conductor increases.
   Some metals (platinum, aluminum, zinc, lead, mercury and some metallic compounds) when cooled to temperature few degrees above $0^{o}K$ lose their resistance completely to the flow of electrical current (R=0).

2. Electric conductivity of:
   - metals (as Cu, Al, ...) is very high because they contain large number of free electrons. (ρ_e is very low)
   - insulators (as glass, mica, ...) is very low because they contain no free electrons. (ρ_e is very high)

3. The product of the resistivity of a material and its conductivity equals 1

4. (V) and (I) are <u>not</u> from the factors affecting the electric resistance.

5. $N = \frac{Kg.m}{Sec^2}$ & $Joule = N.m = \frac{Kg.m^2}{Sec^2}$ & $Watt = \frac{Joule}{Sec} = \frac{N.m}{Sec} = \frac{Kg.m^2}{Sec^3}$

6. When stated in a problem that the wire is reshaped, this means that the volume of the wire is constant, So $A_1 \times L_1 = A_2 \times L_2$

7. The reading of voltmeter on the battery (V) may be

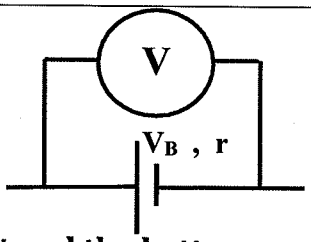

   1. $V < V_B$, $V = V_B - Ir$ in case of closed circuit and the battery supplies energy to the circuit (battery is being discharged)
   2. $V = V_B$, in case of open circuit (no current flow in the circuit) or $r = 0$
   3. $V > V_B$, $V = V_B + Ir$ in case of closed circuit and the battery consumes energy (battery is being charged)

8. <u>Current divider law:</u>

   $\because R_1 // R_2 \quad \therefore$ V is constant

   $\therefore I_1 R_1 = I_2 R_2 = I R_{eq}$

   $\therefore I_1 = \frac{I R_{eq}}{R_1} = I \times \frac{R_2}{R_1 + R_2}$

   $\therefore I_2 = \frac{I R_{eq}}{R_2} = I \times \frac{R_1}{R_1 + R_2}$

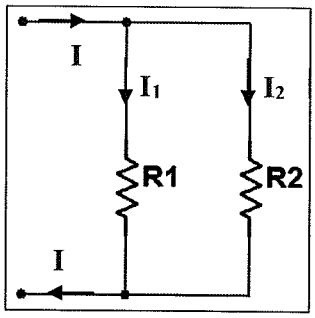

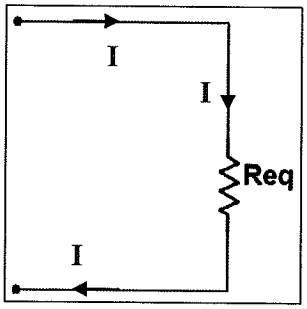

9. Voltage divider law:

$\because R_1$ series with R_2 $\therefore$ I is constant

$$\therefore \frac{V_1}{R_1} = \frac{V_2}{R_2} = \frac{V}{R_{eq}}$$

$$\therefore V_1 = \frac{V R_1}{R_{eq}} = V \times \frac{R_1}{R_1 + R_2}$$

$$\therefore V_2 = \frac{V R_2}{R_{eq}} = V \times \frac{R_2}{R_1 + R_2}$$

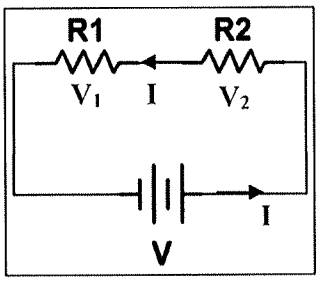

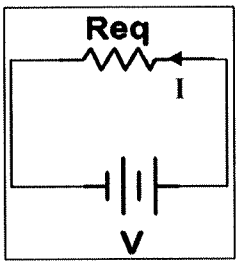

10.

In any resistance, the current flows from the positive terminal (higher potential) to the negative terminal (lower potential).

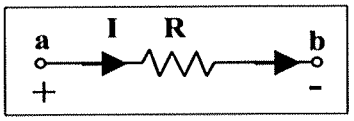

11.

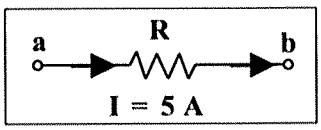

is equivalent to

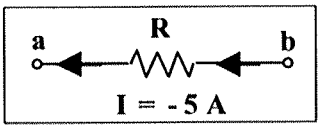

12. If the terminals of one resistance are connected directly together with a wire (Short circuited) the resistance must be deleted and the current will pass through the wire.

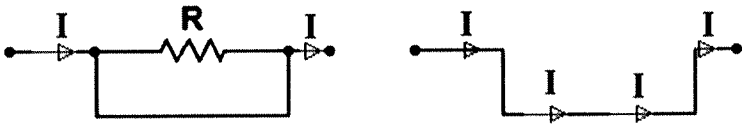

Keep in mind the following notes

1. **The conditions of passing electric current are:**
   1. **Existane of potential difference (battery)**
   2. **Existane of closed electric circuit**

2. **Types of resistances:**
   1. **Fixed resistance :** 
   2. **Variable resistance or Rheostat :** 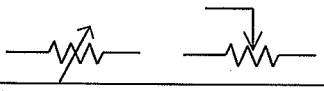

3. **The ohmic resistance is the resistance that obeys ohm's law, so it has a fixed value and its V-I curve is straight line (constant slope).**

   , So non-ohmic resistance is the one doesn't obey ohm's law because the resistance value changes by changing the potential difference and its V-I curve isn't straight line such as <u>bulb filament</u>.

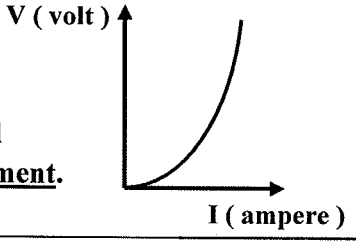

4. **The ammeter is connected in series in the circuit because in series connection (I) is constant.**
5. **The voltmeter is connected in parallel in the circuit because in parallel connection (V) is constant.**
6. **There are two types of electric current**

Direct Current (DC)	Alternating Current (AC)
Has constant magnitude and constant direction	It periodically varies its magnitude and its direction
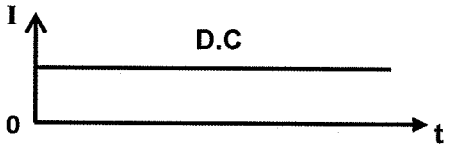	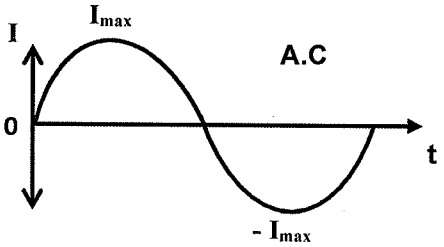
Produced by battery or DC dynamo	Produced by AC dynamo (AC source)
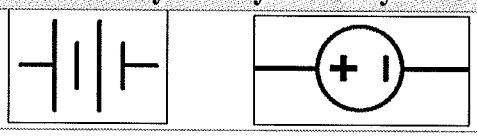	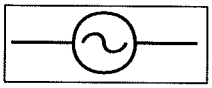

7. **The following figure represents a current source, the written number on it represents the value of electric current intensity passing in this branch.**

(Value) Ampere

Solved Examples

1. A current intensity of 10 A passes through a conductor. Find the number of electrons that passes across its cross-section during 5 seconds given that the charge of an electron e = 1.6 x 10^{-19} coulomb.

$I = 10\ A$
$t = 5\ Sec$ $\qquad n = ???$
$e = 1.6 \times 10^{-19}$

Solution

$\because I = \frac{Q}{t} = \frac{n \times e}{t} \qquad \therefore 10 = \frac{Q}{5} = \frac{n \times 1.6 \times 10^{-19}}{5}$

$\therefore n = \frac{10 \times 5}{1.6 \times 10^{-19}} = 3.125 \times 10^{20}$ electrons

2. Calculate the emf of a source if the work done to transfer 5C is 100 J.

$Q = 5\ C$ $\qquad emf = ???$
$W = 100\ J$

Solution

$\because emf = \frac{W}{Q} = \frac{100}{5} = 20$ Volt

3. An electrical device of 100 watt and 0.4 kilo ohm, find Current intensity and its potential difference.

$P = 100\ W$ $\qquad I = ???$
$R = 0.4\ K\Omega = 0.4 \times 10^3 = 400\ \Omega$ $\qquad V = ???$

Solution

$\because P = I^2 R \qquad \therefore 100 = I^2 \times 400 \qquad \therefore I = \sqrt{\frac{100}{400}} = 0.5\ A$

$\because P = \frac{V^2}{R} \qquad \therefore 100 = \frac{V^2}{400} \qquad \therefore V = \sqrt{100 \times 400} = 200\ V$

4. A wire 30 cm long and 0.3 cm^2 cross sectional area is connected in series with a DC source and an ammeter. The potential difference between the ends of the wire is 0.8 V, when a current of 2A passes through it. Calculate the conductivity of the wire material.

$L = 30 \times 10^{-2} = 0.3\ m$
$A = 0.3 \times 10^{-4}\ m^2$ $\qquad \sigma = ???$
$V = 0.8\ V$
$I = 2\ A$

Solution

$\because R = \frac{V}{I} \qquad \therefore R = \frac{0.8}{2} = 0.4\ \Omega$

$\because R = \rho_e \frac{L}{A} \qquad \therefore 0.4 = \rho_e \times \frac{0.3}{0.3 \times 10^{-4}} \qquad \therefore \rho_e = 4 \times 10^{-5}\ \Omega.m$

$\therefore \sigma = \frac{1}{\rho_e} = \frac{1}{4 \times 10^{-5}} = 25000\ \Omega^{-1}.m^{-1}$

5. A copper wire 30 m long and $2x10^{-6}m^2$ cross sectional area has a voltage difference of 3V across. Calculate the current if the copper resistivity is 1.79×10^{-8} Ω.m

$L = 30$ m
$A = 2\times10^{-6}$ m^2
$V = 3$ V
$\rho_e = 1.79\times10^{-8}$ Ω.m

I = ???

Solution

$\because R = \rho_e \frac{L}{A}$ $\therefore R = 1.79 \times 10^{-8} \times \frac{30}{2 \times 10^{-6}} = 0.2685\ \Omega$

$\because I = \frac{V}{R}$ $\therefore I = \frac{3}{0.2685} = 11.17\ A$

6. A current of 2 A passes in a ring of radius 8 cm as shown in the figure and the potential difference between its terminals equals 2π volt and the C.S.A of the wire of the ring equals 0.2 cm^2. Calculate:
   a. The resistance of the wire of the ring.
   b. The electric resistivity of the wire material.

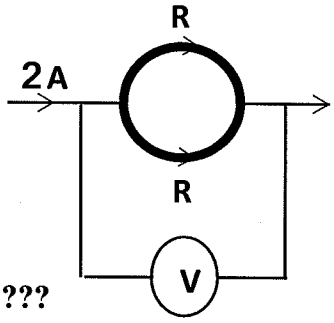

$I = 2$ A
$r_{ring} = 8\times10^{-2}$ m
$V = 2\pi$ V
$A = 0.2\times10^{-4}$ m^2

a. $R_{ring\ wire}$ = ???
b. ρ = ???

Solution

$\because R_{total\ of\ the\ ring} = \frac{V}{I} = \frac{2\pi}{2} = \pi\ \Omega = R//R = \frac{R}{2}$ $\therefore R = 2\pi\ \Omega$

$\therefore R_{ring\ wire} = 2\pi + 2\pi = 4\pi\ \Omega$

$\because R = \rho_e \frac{L}{A}$ $\therefore 4\pi = \rho_e \times \frac{2\pi \times 8 \times 10^{-2}}{0.2 \times 10^{-4}}$

$\therefore \rho_e = 5 \times 10^{-4}\ \Omega.m$

7. A student wound a wire of a finite length as a resistor. Then, he made another of the same material but half the diameter of the first wire and double the length. Find the ratio of the two resistances.

$\rho_1 = \rho_2$ (Same material)
$d_2 = \frac{1}{2} d_1$,so $r_2 = \frac{1}{2} r_1$ or $r_1 = 2\ r_2$
$L_2 = 2\ L_1$

$\frac{R_1}{R_2}$ = ???

Solution

$$\because \frac{R_1}{R_2} = \frac{\rho_1\ L_1\ A_2}{\rho_2\ L_2\ A_1} = \frac{\rho_1\ L_1\ r_2^2}{\rho_2\ L_2\ r_1^2} = \frac{L_1 \times r_2^2}{2\ L_1 \times (2r_2)^2} = \frac{r_2^2}{2 \times 4 \times r_2^2} = \frac{1}{8}$$

8. A copper cylinder of resistance 12 ohms is reshaped where its length becomes three times its original one, what's its new resistance?

$\rho_1 = \rho_2$ (Same conductor)

$R_1 = 12\ \Omega$ $\qquad R_2 = ???$

$L_2 = 3\ L_1$

Solution

The conductor is reshaped, so: $A_1 \times L_1 = A_2 \times L_2$

$\therefore A_1 \times L_1 = A_2 \times 3\,L_1 \qquad \therefore A_2 = \frac{A_1}{3}$ or $A_1 = 3\,A_2$

$\because \frac{R_1}{R_2} = \frac{\rho_1\ L_1\ A_2}{\rho_2\ L_2\ A_1} = \frac{L_1 \times A_2}{3\,L_1 \times 3\,A_2} = \frac{1}{9} \qquad \therefore R_2 = 9\,R_1 = 9 \times 12 = 108\ \Omega$

9. Two wires of equals resistance, but of different materials. The length of the 1st one equals twice that of the 2nd, and the radius of the 1st one equals twice the radius of the 2nd. Find the ratio between their two specific resistances?

$R_1 = R_2$

$L_1 = 2\ L_2 \qquad \frac{\rho_1}{\rho_2} = ???$

$r_1 = 2\ r_2$

Solution

$\because \frac{R_1}{R_2} = \frac{\rho_1\ L_1\ A_2}{\rho_2\ L_2\ A_1} \qquad \therefore \frac{\rho_1}{\rho_2} = \frac{R_1\ L_2\ A_1}{R_2\ L_1\ A_2} = \frac{R_1\ L_2\ r_1^2}{R_2\ L_1\ r_2^2} = \frac{L_2 \times (2r_2)^2}{2\,L_2 \times r_2^2} = \frac{4 \times r_2^2}{2 \times r_2^2} = \frac{2}{1}$

10. A current of 8mA passes in a metallic conductor AB, when another wire of the same length and the same material is connected in parallel with it, the current should be increased to 10mA in order to keep the potential difference between A and B constant. Find ratio between the diameters of the two wires.

$I_1 = 8 \times 10^{-3}$ A

$L_1 = L_2$ (Same length) $\qquad \frac{d_1}{d_2} = ???$

$\rho_1 = \rho_2$ (Same material)

$I = 10 \times 10^{-3}$ A

Parallel connection, V=constant

Solution

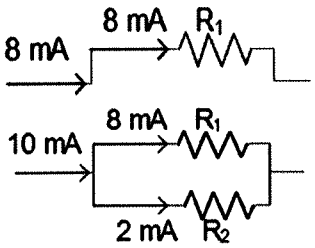

$\because I_2 = I - I_2 = 10 \times 10^{-3} - 8 \times 10^{-3} = 2 \times 10^{-3}$ A

$\because$ Parallel connection $\therefore$ V = constant $\therefore I_1R_1 = I_2R_2$

$\therefore \frac{R_1}{R_2} = \frac{I_2}{I_1} = \frac{2 \times 10^{-3}}{8 \times 10-3} = \frac{1}{4}$

$\because \frac{R_1}{R_2} = \frac{\rho_1\ L_1\ A_2}{\rho_2\ L_2\ A_1} \qquad \therefore \frac{A_1}{A_2} = \frac{R_2\ \rho_1\ L_1}{R_1\ \rho_2\ L_2} = \frac{R_2}{R_1} = \frac{4}{1} \qquad \therefore \frac{r_1}{r_2} = \sqrt{\frac{4}{1}} = \frac{2}{1} \qquad \therefore \frac{d_1}{d_2} = \frac{2}{1}$

11. A cell of E.M.F = 6 V & r = 0.1 ohm, find the electrical energy consumed per second in a (R = 3.9 Ω) Joined with the cell.

$V_B = 6\ V$, $r = 0.1\ \Omega$

$R = 3.9\ \Omega$ electrical energy consumed per second = $Power_{of\ R}$ = ?

Solution

$$\because I = \frac{V_B}{R_{eq} + r} = \frac{6}{3.9 + 0.1} = 1.5\ A$$

$$\because P = I^2 R = 1.5^2 \times 3.9 = 8.775\ Watt$$

12. A battery 6 volt and internal resistance one ohm, ammeter of negligible resistance, fixed resistance R and a rheostat are connected in series. When the slider is adjusted at the beginning of the rheostat an electrical current of 0.6A flows through the circuit, and when the slider is adjusted at the end of the rheostat an electrical current of 0.1A flows through the circuit. Calculate the value of:

a) The resistance R. b) The resistance of the rheostat.

$V_B = 6\ V$, $r = 1\ \Omega$

$I_1 = 0.6\ A$ in this case ($R_{eq\ 1} = R$)

$I_2 = 0.1\ A$ in this case ($R_{eq\ 2} = R + R_{Rheostat}$)

a. R = ???

b. $R_{Rheostat}$ = ???

Solution

In case (1):

$\because V_B = I_1 (R_{eq\ 1} + r)$ $\therefore 6 = 0.6 \times (R + 1)$ $\therefore R = 9\ \Omega$

In case (2):

$\because V_B = I_2 (R_{eq\ 2} + r)$ $\therefore 6 = 0.1 \times (R + R_{Rheostat} + 1)$ $\therefore R = 50\ \Omega$

13. A 12 V battery has an internal resistance of 0.5 Ω. Calculate the percentage of voltage drop for this battery when connected to a 2 Ω lamp.

$V_B = 12\ V$, $r = 0.5\ \Omega$

$R = 2\ \Omega$ % of voltage drop = ???

Solution

$$\because I = \frac{V_B}{R_{eq} + r} = \frac{12}{2 + 0.5} = 4.8\ A$$

$$\because \%\ of\ voltage\ drop = \frac{Ir}{V_B} \times 100 = \frac{4.8 \times 0.5}{12} \times 100 = 20\ \%$$

14. When Key S is closed:
What happens to the reading of the ammeter and voltmeters when R_2 increases?

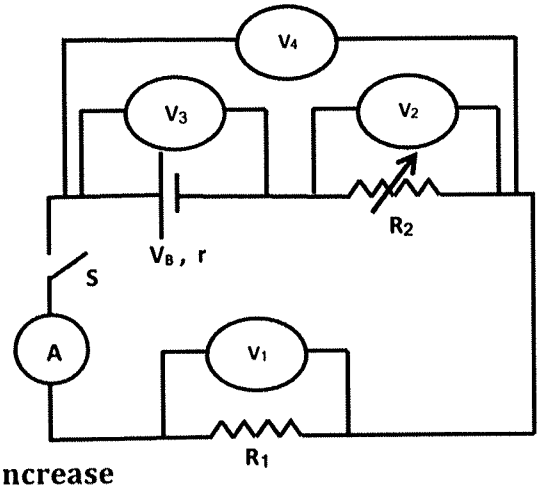

Solution

$(A) = I = \dfrac{V_B}{R_1 + R_2 + r}$

When R_2 increase $\therefore$ I decrease

$(V_1) = I\ R_1$

When I decrease $\therefore$ V_1 decrease

$(V_2) = I\ R_2$

When I decrease & R_2 increase $\therefore$ V_2 increase

Very important note: The effect of (R) > The effect of (I)

$(V_3) = \begin{cases} I\,R_{eq} = I\,(R_1 + R_2) \\ \text{When I decrease and } R_2 \text{ increase} \quad \therefore V_3 \text{ increase} \\ \text{OR} \\ V_B - I\,r \\ \text{When I decrease} \quad \therefore I\,r \text{ decrease} \quad \therefore V_3 \text{ increase} \end{cases}$

$(V_4) = \begin{cases} I\,R_1 \\ \text{When I decrease} \quad \therefore V_4 \text{ decrease} \\ \text{OR} \\ V_B - I\,r - I\,R_2 = V_B - I\,(r + R_2) \\ \text{When I decrease and } R_2 \text{ increase} \quad \therefore V_4 \text{ decrease} \end{cases}$

15. Three resistors of 25, 70 and 85 Ω are connected in series to 45-volt battery of negligible internal resistance. Calculate the current flowing in each resistor and the terminal potential of each.

Solution

$\because\ R_{eq} = 25 + 70 + 85 = 180\ \Omega$

$\therefore\ I = \dfrac{V_B}{R_{eq} + r} = \dfrac{45}{180 + 0} = 0.25\ A$

$\therefore\ I_{25\Omega} = I_{70\Omega} = I_{85\Omega} = 0.25\ A$

$\therefore\ V_{25\Omega} = I_{25\Omega} \times R = 0.25 \times 25 = 6.25$ Volt

$\therefore\ V_{70\Omega} = I_{70\Omega} \times R = 0.25 \times 70 = 17.5$ Volt

$\therefore\ V_{85\Omega} = I_{85\Omega} \times R = 0.25 \times 85 = 21.25$ Volt

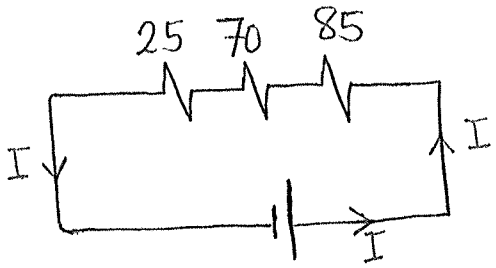

16. If the resistors in the previous example are connected in parallel to the same battery, calculate:

a. The current flowing in each resistor.
b. The total resistance.
c. The current through the circuit.

Solution

Since parallel connection:

$\therefore V_{25\Omega} = V_{70\Omega} = V_{85\Omega} = V_{R_{eq}} = 45$ Volt

$\therefore I_1 = \frac{V_{25\Omega}}{R} = \frac{45}{25} = 1.8$ A

$\therefore I_2 = \frac{V_{70\Omega}}{R} = \frac{45}{70} = 0.643$ A

$\therefore I_3 = \frac{V_{85\Omega}}{R} = \frac{45}{85} = 0.529$ A

$\because \frac{1}{R_{eq}} = \frac{1}{25} + \frac{1}{70} + \frac{1}{85} = \frac{393}{5950}$ $\therefore R_{eq} = 15.14\ \Omega$

$\because I = \frac{V_B}{R_{eq} + r} = \frac{45}{15.14 + 0} = 2.972$ A

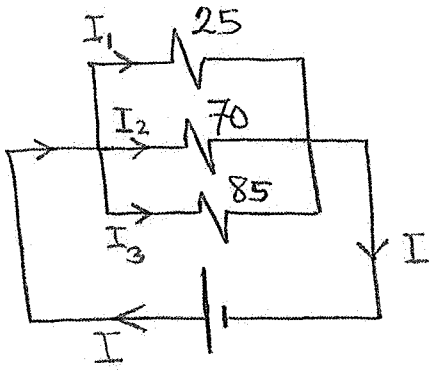

17. A wire of uniform cross-section area carries current of 0.1A when the potential difference between its terminals is 1.2V. If a square abcd is made of this wire, calculate its equivalent resistance when a power source is connected one time to the points a and c and another time to the points a and d.

Solution

$\because R_{wire} = \frac{V}{I} = \frac{1.2}{0.1} = 12\ \Omega$

$\therefore R_{each\ side} = \frac{12}{4} = 3\ \Omega$

Betweeen (a)*and* (c):

$\therefore R_{eq} = \frac{(3+3)\times(3+3)}{(3+3)+(3+3)} = 3\ \Omega$

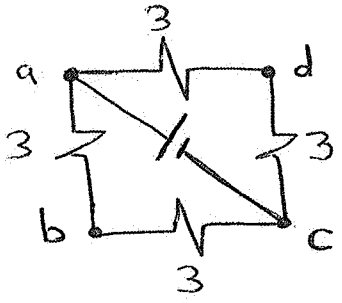

Betweeen (a)*and* (d):

$\therefore R_{eq} = \frac{(3+3+3)\times(3)}{(3+3+3)+(3)} = 2.25\ \Omega$

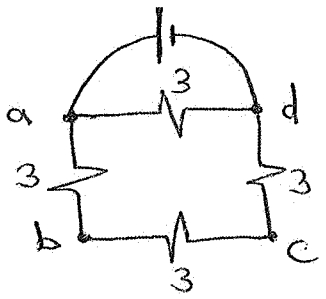

18. In the shown figure, two resistors A, B are connected in parallel; the combination is connected in series with a resistor C and 18 V battery of negligible resistance. If the value of resistances A, B and C are 3, 6, 7 respectively calculate the total resistance of the circuit and the current flowing through the circuit and through each of A and B.

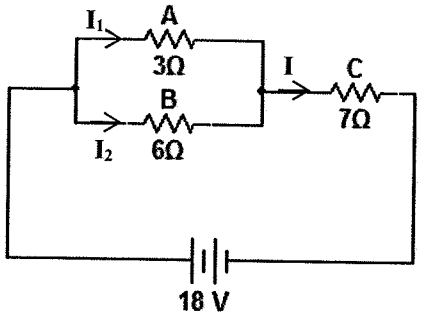

Solution

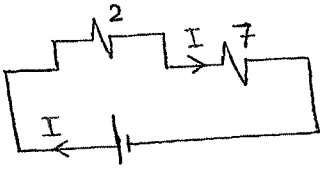

$\because R_1 = \frac{3 \times 6}{3+6} = 2\,\Omega$

$\therefore 3 \times I_1 = 6 \times I_2 = 2 \times I \quad \rightarrow (1)$

$\therefore R_{eq} = 2 + 7 = 9\,\Omega \qquad \therefore I = \frac{V_B}{R_{eq} + r} = \frac{18}{9+0} = 2\,A$

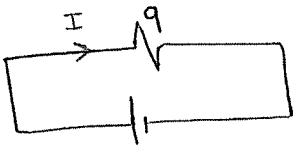

From (1): $\therefore I_1 = \frac{2 \times 2}{3} = \frac{4}{3}\,A \qquad \therefore I_2 = \frac{2 \times 2}{6} = \frac{2}{3}\,A$

---

19. In the shown figure:

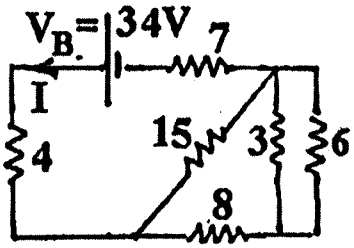

Find:

a. Main electric current intensity
b. Current passing in 15 Ω resistance
c. The power consumed in 7 Ω resistance

Solution

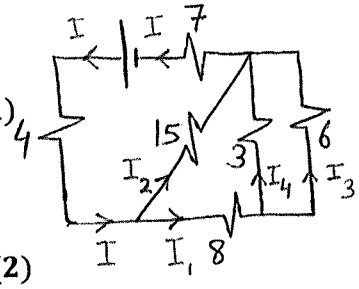

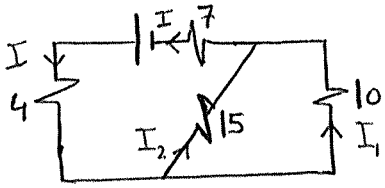

$\because R_1 = \frac{3 \times 6}{3+6} = 2\,\Omega$

$\therefore 3 \times I_4 = 6 \times I_3 = 2 \times I_1 \quad \rightarrow (1)$

$\therefore R_2 = 2 + 8 = 10\,\Omega$

$\therefore R_3 = \frac{10 \times 15}{10+15} = 6\,\Omega$

$\therefore 15 \times I_2 = 10 \times I_1 = 6 \times I \quad \rightarrow (2)$

$\therefore R_{eq} = 4 + 6 + 7 = 17\,\Omega$

$\therefore I = \frac{V_B}{R_{eq} + r} = \frac{34}{17+0} = 2\,A$

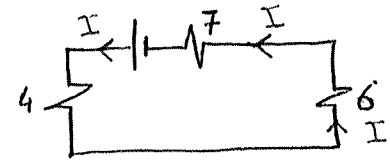

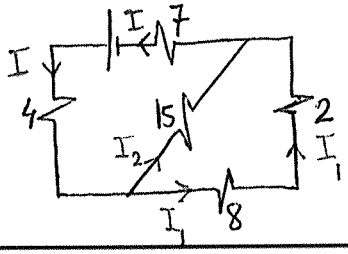

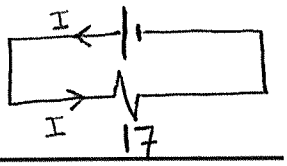

From (2): $\therefore I_2 = \frac{6 \times 2}{15} = 0.8\,A$

$\therefore P_{7\Omega} = I^2 R = 2^2 \times 7 = 28$ Watt

20.

In the shown circuit, calculate:

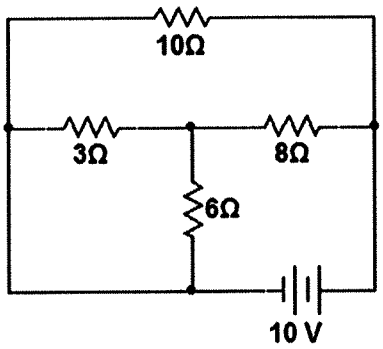

a. The equivalent resistance of the circuit.
b. The total current intensity passing through the circuit.
c. The electric current intensity passing through 6 Ω.

Solution

$\because R_1 = \frac{3 \times 6}{3+6} = 2\,\Omega$

$\therefore 3 \times I_4 = 6 \times I_3 = 2 \times I_2 \rightarrow (1)$

$\therefore R_2 = 2 + 8 = 10\,\Omega$

a. $\therefore R_{eq} = \frac{10 \times 10}{10+10} = 5\,\Omega$

$\therefore 10 \times I_1 = 10 \times I_2 = 5 \times I \rightarrow (2)$

b. $\therefore I = \frac{V_B}{R_{eq} + r} = \frac{10}{5+0} = 2\,A$

From (2): $\therefore I_2 = \frac{5 \times 2}{10} = 1\,A$

c. From (1): $\therefore I_3 = \frac{2 \times 1}{6} = 1/3\,A$

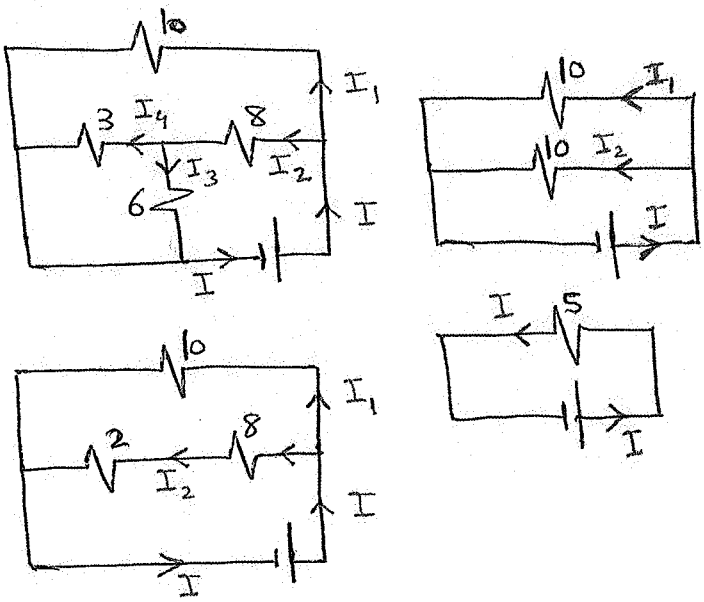

---

21. In the shown electric circuit:
    Calculate:
    a. The total resistance of the circuit.
    b. The total current intensity that passes in the circuit.
    c. The potential difference across a & b.

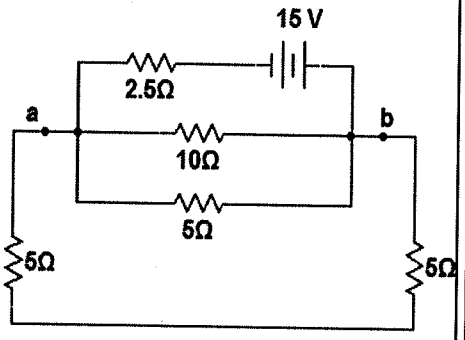

Solution

$\because R_1 = 5 + 5 = 10\,\Omega$

$\therefore R_2 = 10 // 5 // 10$

$\therefore \frac{1}{R_2} = \frac{1}{10} + \frac{1}{5} + \frac{1}{10} = \frac{2}{5}$

$\therefore R_2 = 2.5\,\Omega$

$\therefore 10 \times I_3 = 5 \times I_2 = 10 \times I_1 = 2.5 \times I \rightarrow (1)$

a. $\therefore R_{eq} = 2.5 + 2.5 = 5\,\Omega$

b. $\therefore I = \frac{V_B}{R_{eq} + r} = \frac{15}{5+0} = 3\,A$

From (1): $\therefore I_1 = \frac{2.5 \times 3}{10} = 0.75\,A$

c. $\therefore V_{ab} = -10 \times I_1 = -7.5\,V$

$\therefore |V_{ab}| = 7.5\,V$

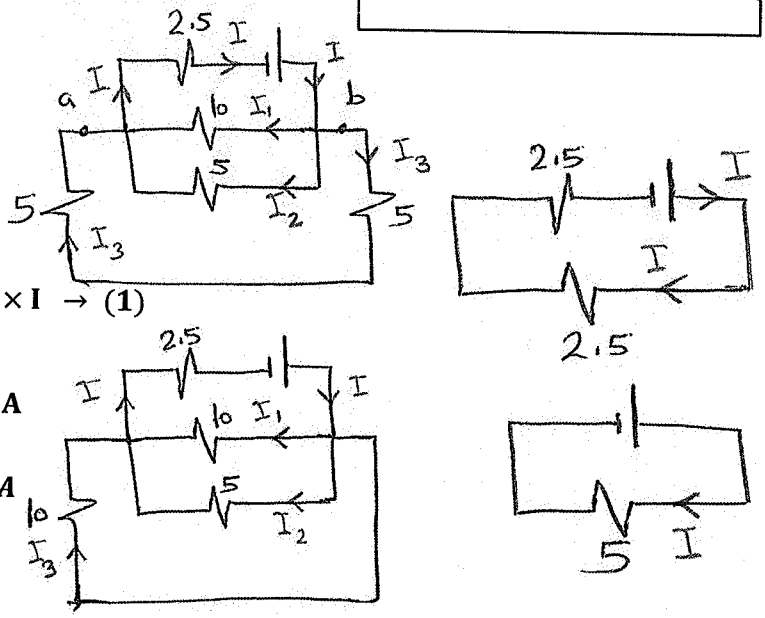

-ve sign means that potential point (a) is less than potential point (b) ($V_{ab} = V_a - V_b$)

22. For the given circuit:

Find:

a. The input current I

b. Potential differnce across the 8 Ω resistor

c. Potential differnce across 10 Ω

d. Potential differnce from a to d

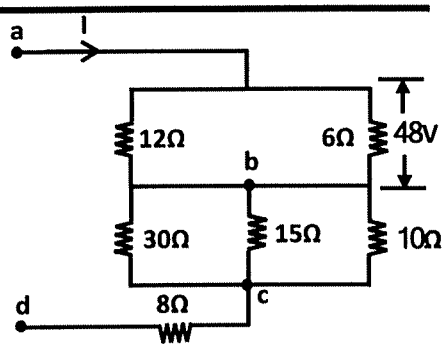

Solution

$\because R_1 = \frac{12 \times 6}{12 + 6} = 4\,\Omega$

$\therefore 6 \times I_1 = 12 \times I_2 = 4 \times I = 48$ Volt $\rightarrow$ (1)

$\therefore R_2 = 30 // 15 // 10$

$\therefore \frac{1}{R_2} = \frac{1}{30} + \frac{1}{15} + \frac{1}{10} = \frac{1}{5}$

$\therefore R_2 = 5\,\Omega$

$\therefore 10 \times I_3 = 15 \times I_4 = 30 \times I_5 = 5 \times I$ $\rightarrow$ (2)

$\therefore R_{eq} = 4 + 5 + 8 = 17\,\Omega$

a. From (1): $\therefore I = \frac{48}{4} = 12$ A

b. $\therefore V_{8\Omega} = 8 \times I = 8 \times 12 = 96$ V

c. From (2): $\therefore V_{10\Omega} = 5 \times I = 5 \times 12 = 60$ V

d. $\therefore V_{ad} = I\,R_{eq} = 12 \times 17 = 204$ V

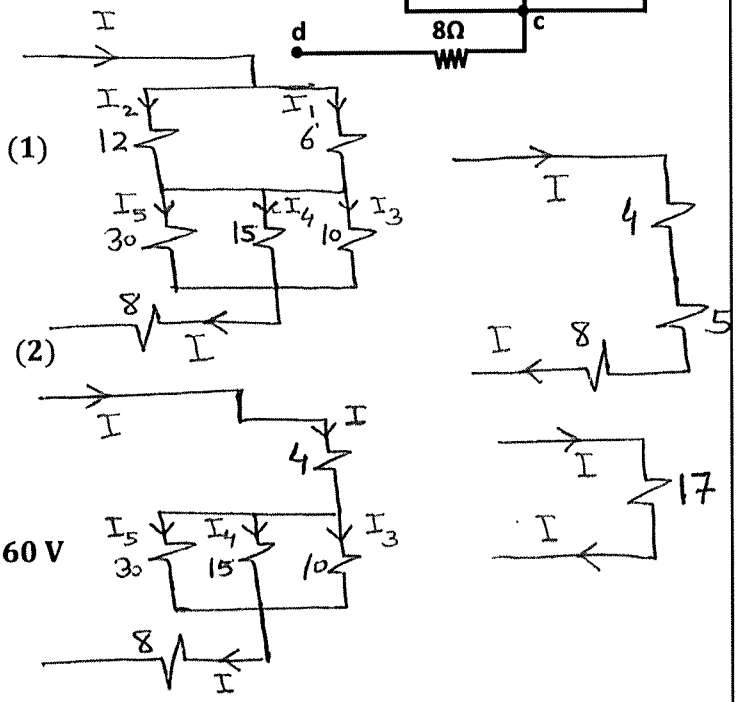

23.

For the given circuit:

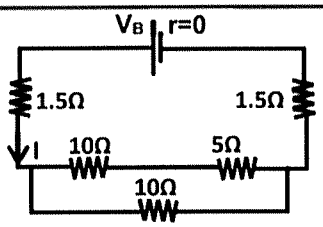

Find: Value of V_B

Solution

$\because R_1 = 10 + 5 = 15\,\Omega$

$\because R_2 = \frac{15 \times 10}{15 + 10} = 6\,\Omega$

$\therefore 15 \times I_1 = 10 \times I_2 = 6 \times I = 10$ V $\rightarrow$ (1)

$\therefore R_{eq} = 1.5 + 6 + 1.5 = 9\,\Omega$

From (1): $\therefore I = \frac{10}{6} = 5/3$ A

$\therefore V_B = I(R_{eq} + r) = \frac{5}{3} \times (9 + 0) = 15$ Volt

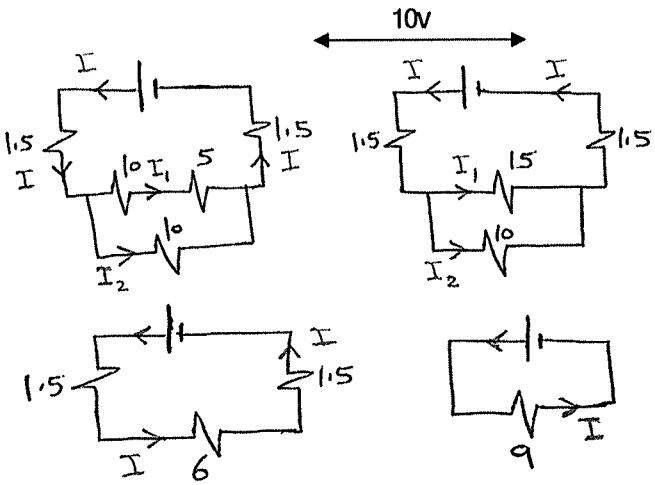

24. In the given circuit:

The ammeter reads 2 A when "K" is open , and reads 3A when "K" is closed, Find V_B & r .

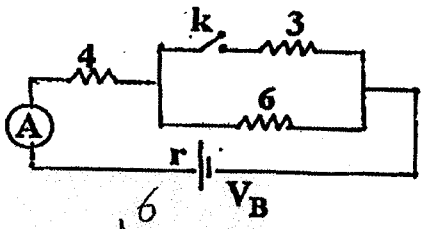

Solution

When Open:

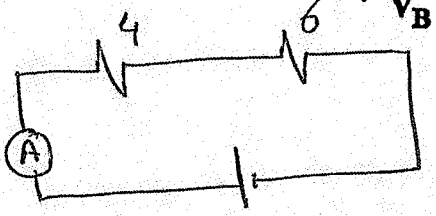

$\because R_{eq} = 4 + 6 = 10\,\Omega$

$\therefore V_B = I(R_{eq} + r) = 2 \times (10 + r) \rightarrow (1)$

When Closed:

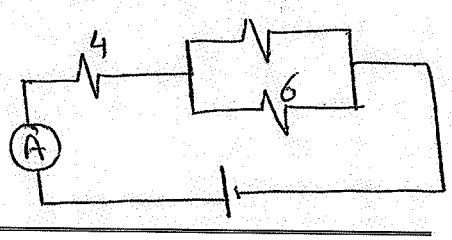

$\because R_{eq} = \dfrac{3 \times 6}{3 + 6} + 4 = 6\,\Omega$

$\therefore V_B = I(R_{eq} + r) = 3 \times (6 + r) \rightarrow (2)$

$\therefore (1) = (2): \quad 2 \times (10 + r) = 3 \times (6 + r)$

$\therefore 20 + 2r = 18 + 3r \qquad \therefore r = 2\,\Omega$

From (1): $\therefore V_B = 2 \times (10 + 2) = 24$ Volt

25. For the shown circuit:

Complete the following table:

	K_1	K_2	Reading of voltmeter
1	Closed	Closed	90 Volt
2	Open	Open	0
3	Closed	Open	0
4	Open	Closed	60 Volt

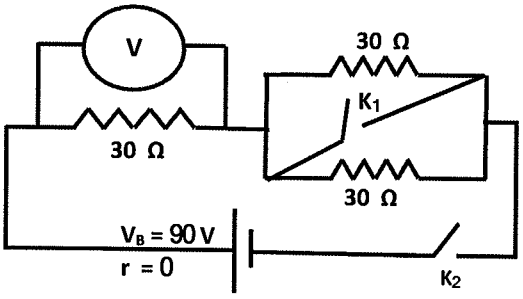

Voltmeter reading = $V = 30 \times I_{main}$, In case 2 & 3: $I_{main} = 0 \quad \therefore V = 0$

1

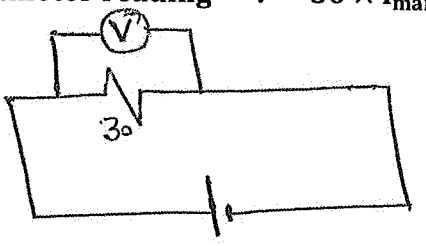

4

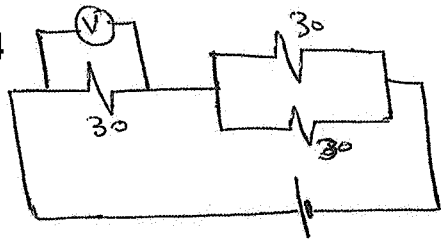

Write down the steps

26.

In the circuit shown in the opposite figure:

Find the reading of (A), (V_1) and (V_2) when the key (k) is closed

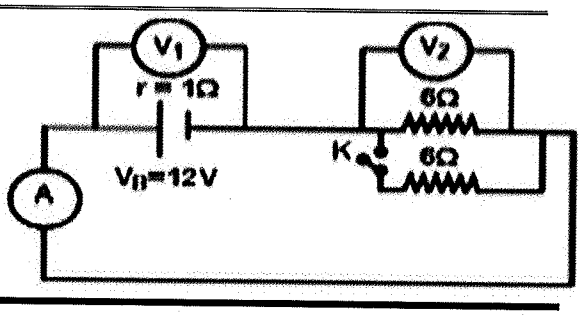

Solution

When the key (k) is closed (6 // 6)

$\because R_{eq} = \frac{6\times6}{6+6} = 3\ \Omega$ $\therefore$ I = Ammetere reading = $\frac{V_B}{R_{eq}+r} = \frac{12}{3+1} = 3\ A$

$\therefore V_2 = I \times R_{eq} = 3 \times 3 = 9\ V$

$\therefore V_1 = V_B - I \times r = 12 - 3 \times 1 = 9\ V$

27. In the shown figure:

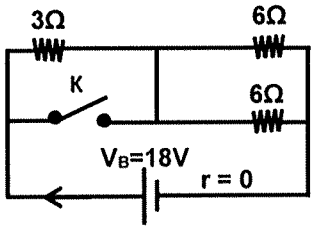

Find main current intensity when:

a. K is open

b. K is closed

Solution

a. **When Open:**

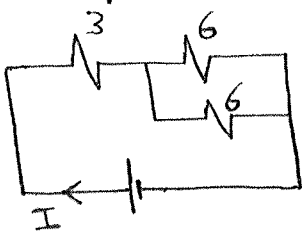

$\because R_{eq} = \frac{6\times6}{6+6} + 3 = 6\ \Omega$

$\therefore I = \frac{V_B}{R_{eq}+r} = \frac{18}{6+0} = 3\ A$

b. **When Closed:**

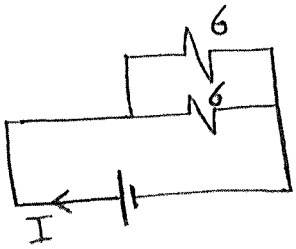

$\because R_{eq} = \frac{6\times6}{6+6} = 3\ \Omega$

$\therefore I = \frac{V_B}{R_{eq}+r} = \frac{18}{3+0} = 6\ A$

28. In the shown figure:

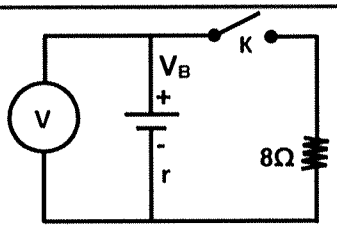

If K is open voltmeter indicates 18V and if it is closed it indicates 16V.

Find V_B and r.

Solution

When key is open: $\therefore V = V_B = 18$ Volt

When key is closed: $\therefore V = V_B - Ir = 16$ Volt $= I\ R_{eq}$

$\therefore I = \frac{V}{R_{eq}} = \frac{16}{8} = 2\ A$ $\therefore Ir = 18 - 16 = 2$ volt $\therefore r = \frac{2}{2} = 1\ \Omega$

29.

In the shown figure:

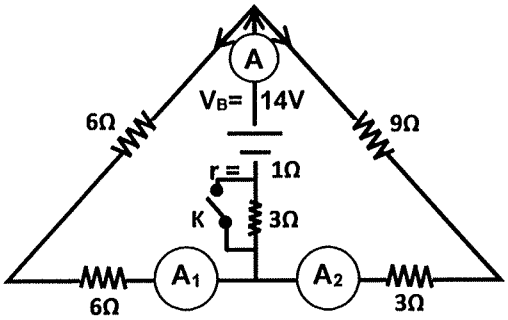

Find A, A_1 & A_2:

a. When K is open

b. When K is closed

Solution

a. Key is open

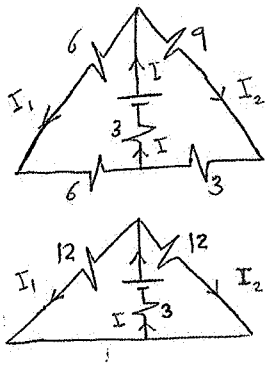

$\because R_1 = 9 + 3 = 12\,\Omega$

$\because R_2 = 6 + 6 = 12\,\Omega$

$\because R_3 = \frac{12}{2} = 6\,\Omega$

$\therefore R_{eq} = 6 + 3 = 9\,\Omega$

$\therefore A = I = \frac{V_B}{R_{eq} + r}$

$= \frac{14}{9+1} = 1.4\,A$

$\therefore A_1 = A_2 = \frac{I}{2} = \frac{1.4}{2} = 0.7\,A$

b. Key is closed

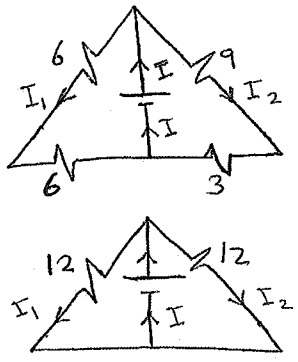

$\because R_1 = 9 + 3 = 12\,\Omega$

$\because R_2 = 6 + 6 = 12\,\Omega$

$\because R_{eq} = \frac{12}{2} = 6\,\Omega$

$\therefore A = I = \frac{V_B}{R_{eq} + r}$

$= \frac{14}{6+1} = 2\,A$

$\therefore A_1 = A_2 = \frac{I}{2} = \frac{2}{2} = 1\,A$

---

30. In the electric circuit shown in figure:

The reading of the ammeter (A_1) = 1 ampere

The reading of the ammeter (A_2)= 2 ampere

The internal resistance of the battery = 1 Ω, Calculate:

a. The resistance (R).

b. The emf (V_B) of the battery.

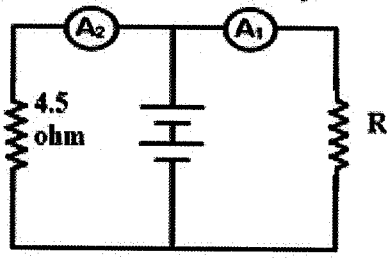

Solution

a. $\because R // 4.5$ $\quad \therefore 4.5 \times I_2 = R \times I_1$ $\quad \therefore 4.5 \times 2 = 1 \times R$

$\therefore R = 4.5 \times 2 = 9\,\Omega$

b. $\therefore I = I_1 + I_2 = 1 + 2 = 3\,A$ $\quad \therefore V_B = I(R_{eq} + r) = 3 \times \left(\frac{4.5 \times 9}{4.5 + 9} + 1\right) = 12\,Volt$

---

31. In the shown circuit:

If A_2 = 0.75A, find:

a. A_1 & A_3

b. V_B

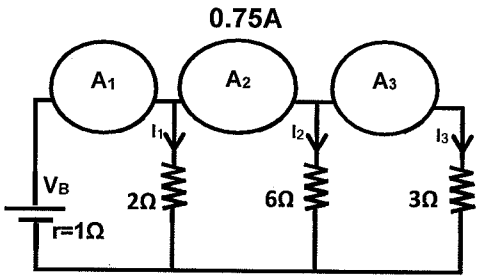

Solution

$I_4 = 0.75\,A$

$\because R_1 = \frac{3 \times 6}{3 + 6} = 2\,\Omega$

$\therefore 3 \times I_3 = 6 \times I_2 = 2 \times I_4 \quad \rightarrow (1)$

$\therefore R_{eq} = \frac{2 \times 2}{2 + 2} = 1\,\Omega$

$\therefore 2 \times I_4 = 2 \times I_1 = 1 \times I \quad \rightarrow (2)$

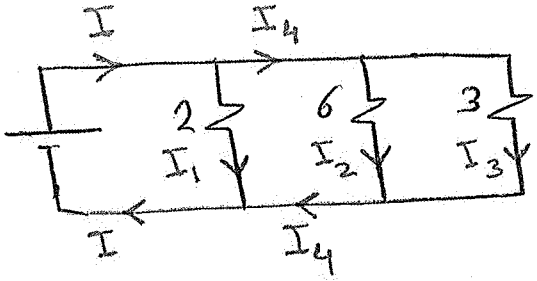

a. From (2): $\therefore I = \frac{2 \times 0.75}{1} = 1.5\,A$

$= \text{Reading of } A_1$

From (1): $\therefore I_3 = \frac{2 \times 0.75}{3} = 0.5\,A$

$= \text{Reading of } A_3$

b. $\therefore V_B = I(R_{eq} + r)$

$= 1.5 \times (1 + 1) = 3\,Volt$

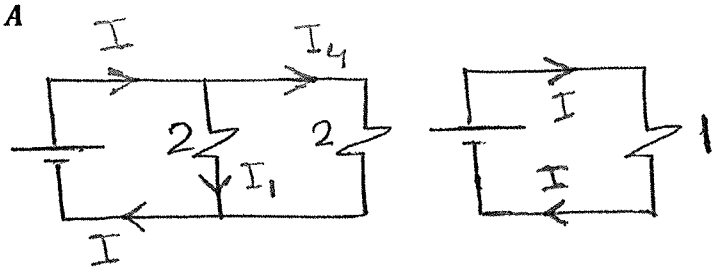

32.

In the shown circuit:

Find:

Readings of Ammeter and Voltmeter

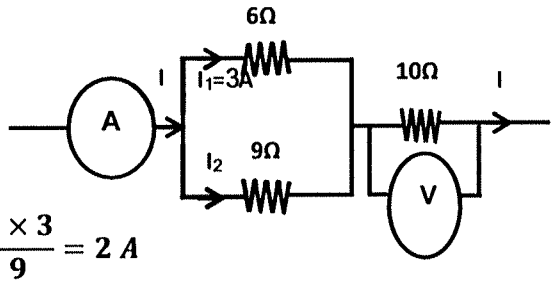

Solution

$\because 6\Omega // 9\Omega \quad \therefore 6 \times I_1 = 9 \times I_2 \quad \therefore I_2 = \frac{6 \times 3}{9} = 2\,A$

$\therefore I = I_1 + I_2 = 3 + 2 = 5\,A = \text{Reading of A}$

$\therefore V = I \times R = 5 \times 10 = 50\,Volt = \text{Reading of V}$

33. The figure represents a part of an electric circuit:

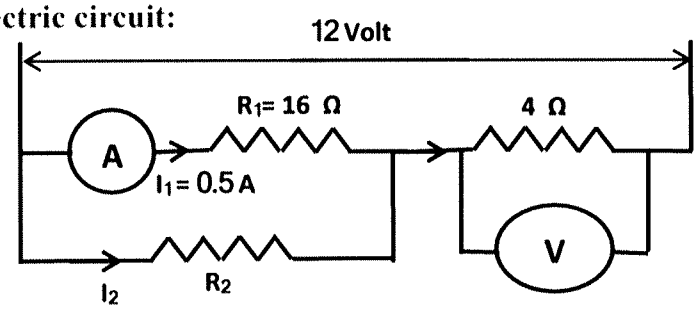

Calculate:

a. The reading of voltmeter (V).

b. The value of the resistance (R_2).

Solution

$\because R_1 // R_2$

$\therefore V$ is constant $\quad \therefore I_1 \times R_1 = I_2 \times R_2 = 0.5 \times 16 = 8$ Vots

a. $\therefore$ Reading of V $= 12 - 8 = 4\,Volt$

$\therefore I_{total} = \frac{4}{4} = 1$ A

$\therefore I_2 = I - I_1 = 1 - 0.5 = 0.5\,A$

b. $\because I_1 = I_2 \quad \therefore R_2 = R_1 = 16\,\Omega$

34.

In the shown circuit:

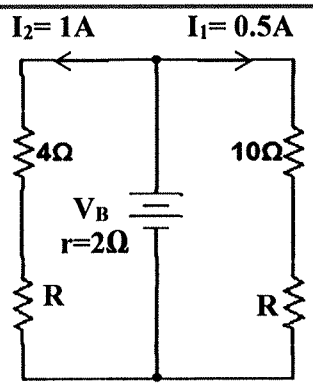

Find:

Value of R and V_B

Solution

$\because (R+10) // (R+4)$

$\therefore (R+10) \times I_1 = (R+4) \times I_2$

$\therefore 0.5 \times (R+10) = 1 \times (R+4)$

$\therefore 0.5R + 5 = R + 4$

$\therefore R = 2\,\Omega$

$\therefore R_{eq} = \dfrac{(2+10)\times(2+4)}{(2+10)+(2+4)} = 4\,\Omega$

$\therefore I = I_1 + I_2 = 0.5 + 1 = 1.5\ A$

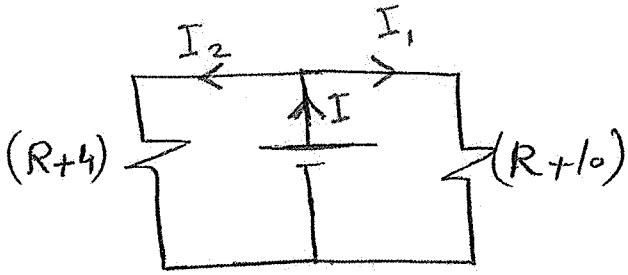

$\therefore V_B = I(R_{eq} + r) = 1.5 \times (4+2) = 9\ Volt$

35.

Find:

Value of R to make the total resistance of the shown circuit = 50 Ω

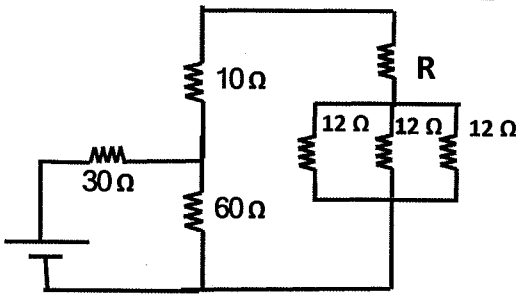

Solution

$\because R_1 = 12 // 12 // 12 = \dfrac{12}{3} = 4$

$\because R_2 = 4 + R + 10 = 14 + R$

$\because R_3 = R_2 // 60$

$\therefore R_{eq} = R_3 + 30 = 50\,\Omega$

$\therefore R_3 = 50 - 30 = 20\,\Omega$

$\therefore \dfrac{1}{R_2} = \dfrac{1}{R_3} - \dfrac{1}{60} = \dfrac{1}{20} - \dfrac{1}{60} = \dfrac{1}{30}$

$\therefore R_2 = 30\,\Omega$

$\therefore R = R_2 - 14 = 30 - 14 = 16\,\Omega$

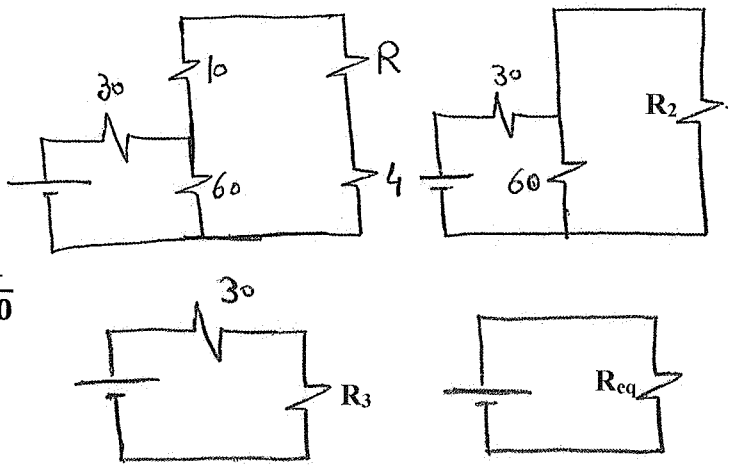

36. When a resistance (R) is connected to a cell a current (I) passes. If another resistance of value (R/2) is connected in parallel to the 1st one. The current drawn from the cell is doubled, find internal resistance of the cell.

Solution

Case (1): $\therefore V_B = I(R + r) \rightarrow (1)$

Case (2): $\because R_{eq} = \dfrac{R \times (R/2)}{R + (R/2)} = \dfrac{R}{3}$ $\quad \therefore V_B = 2I \times \left(\dfrac{R}{3} + r\right) \rightarrow (2)$

$\therefore (1) = (2)$: $\quad \therefore I(R + r) = 2I \times \left(\dfrac{R}{3} + r\right) \quad \therefore R + r = \dfrac{2R}{3} + 2r$

$\therefore r = \dfrac{R}{3}\ \Omega$

37. You have 6 identical lamps, each marked (110V, 55W), show how to connect them safely with 220V supply then find their equivalent resistance.

Solution

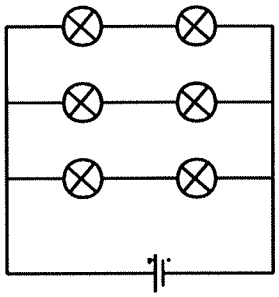

$\because \dfrac{\text{Supply voltage}}{\text{voltage per lamp}} = \dfrac{220}{110} = 2$

, So we can connect 2 lamps in series in one branch

$\because P = \dfrac{V^2}{R}$ $\quad \therefore 55 = \dfrac{110^2}{R}$ $\quad \therefore R_{one\ lamp} = 220\ \Omega$

$\therefore R_{eq} = \dfrac{440}{3} = 440\ \Omega$

38. Three resistors (20, 40, 60) ohm are connected to an electric current source. If potential difference across each resistor is (50, 20, 30) volt respectively, illustrate by drawing how these resistors could be connected. Then calculate the total resistance of the electric circuit.

Solution

	R_1	R_2	R_3
R	20	40	60
V	50	20	30
$I = \frac{V}{R}$	2.5	0.5	0.5

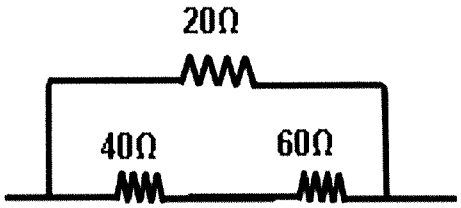

$\because I_{40\,\Omega} = I_{60\,\Omega}$ $\quad \therefore$ 40 Ω is series with 60Ω

$\because V_{20\,\Omega} = V_{40\,\Omega} + V_{60\,\Omega}$ $\quad \therefore$ 20 Ω is parallel with (40Ω + 60Ω)

$\therefore R_{eq} = \dfrac{(40+60)\times(20)}{(40+60)+(20)} = \dfrac{50}{3}\ \Omega \cong 16.667\ \Omega$

39. An electric circuit contains four electric resistors (R_1, R_2, R_3, R_4) Ohm, if the electric current intensity that flows througth each of them is (0.3, 0.3, 0.4, 0.2) Ampere respectively and the value of R_1= 6Ω, R_3= 15Ω and the internal resistance of the battery 1Ω.

a. Show by drawing the meth od of connection of these resistors.
b. Calculate the total resistance of the circuit.
c. Calculate the electromotive force of the electric source.

Solution (1)

	R_1	R_2	R_3	R_4
R	6	??	15	??
I	0.3	0.3	0.4	0.2
V = IR	1.8	??	6	??

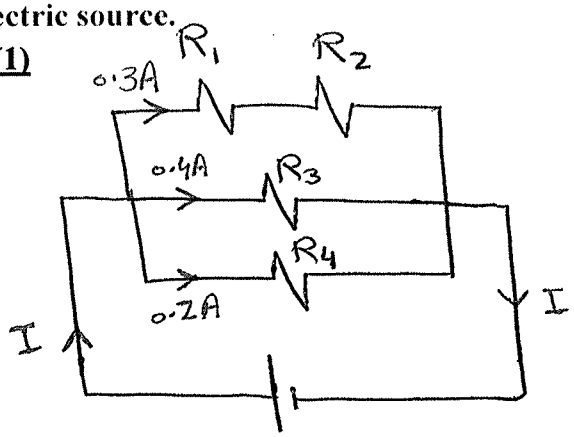

As shown in the drawing:

$\because R_{eq} = (R_1 + R_2) // (R_3) // (R_4)$ $\therefore$ V is constant

$(R_1 + R_2) \times 0.3 = 0.4 \times R_3 = 0.2 \times R_4$

$\therefore R_4 = \frac{0.4 \times 15}{0.2} = \frac{6}{0.2} = 30\ \Omega$

$\therefore R_1 + R_2 = \frac{0.4 \times 15}{0.3} = \frac{6}{0.2} = 20\ \Omega$ $\therefore R_2 = 20 - 6 = 14\Omega$

b. $\therefore \frac{1}{R_{eq}} = \frac{1}{14+6} + \frac{1}{15} + \frac{1}{30} = \frac{3}{20}$ $\therefore R_2 = \frac{20}{3}\ \Omega$

c. $\therefore V_B = I(R_{eq} + r) = (0.3 + 0.4 + 0.2) \times \left(\frac{20}{3} + 1\right) = 6.9\ Volt$

Solution (2)

	R_1	R_2	R_3	R_4
R	6	??	15	??
I	0.3	0.3	0.4	0.2
V = IR	1.8	??	6	??

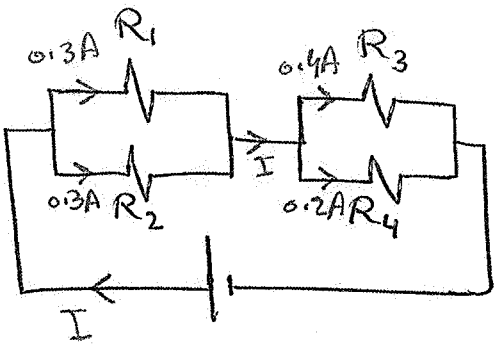

$\because 0.3 + 0.3 = 0.4 + 0.2$

$\therefore$ the connection is as shown in the drawing:

$\because (R_1) // (R_2)$

$\because I_1 = I_2$ $\therefore R_2 = R_1 = 6\ \Omega$

$\because (R_3) // (R_4)$

$\therefore 0.4 \times R_3 = 0.2 \times R_4$

$\therefore R_4 = \frac{0.4 \times 15}{0.2} = \frac{6}{0.2} = 30\ \Omega$

b. $\therefore R_{eq} = \frac{6 \times 6}{6+6} + \frac{15 \times 30}{15+30} = 13\ \Omega$

c. $\therefore V_B = I(R_{eq} + r) = (0.3 + 0.3) \times (13 + 1) = 8.4\ Volt$

40. In the shown circuit:

Calculate:

1. **The current intensity in each branch.**
2. **The potential difference between points a & b**

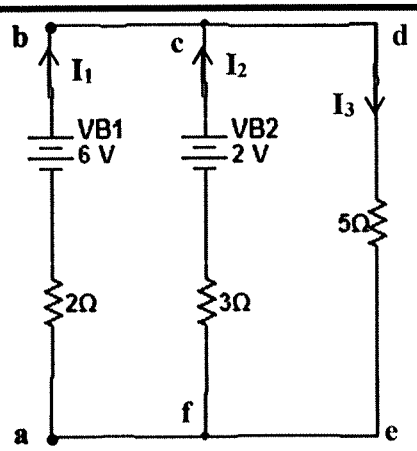

Solution

KCL at node (A):

$\sum I_{in} = \sum I_{out} \quad \therefore \; I_1 + I_2 = I_3 \quad \rightarrow (1)$

KVL at loop (1) (cdefc):

$\sum V_{\text{any closed loop}} = \text{Zero}$

$\therefore \; 5\,I_3 + 3\,I_2 - 2 = 0 \quad \therefore \; 5\,I_3 = 2 - 3\,I_2$

$\therefore \; I_3 = \frac{2}{5} - \frac{3}{5}\,I_2 \quad \rightarrow (2)$

KVL at loop (2) (abcfa):

$\sum V_{\text{any closed loop}} = \text{Zero}$

$\therefore \; 2\,I_1 - 6 + 2 - 3\,I_2 = 0$

$\therefore \; 2\,I_1 - 3\,I_2 - 4 = 0 \quad \therefore \; 2\,I_1 = 4 + 3\,I_2$

$\therefore \; I_1 = 2 + \frac{3}{2}\,I_2 \quad \rightarrow (3)$

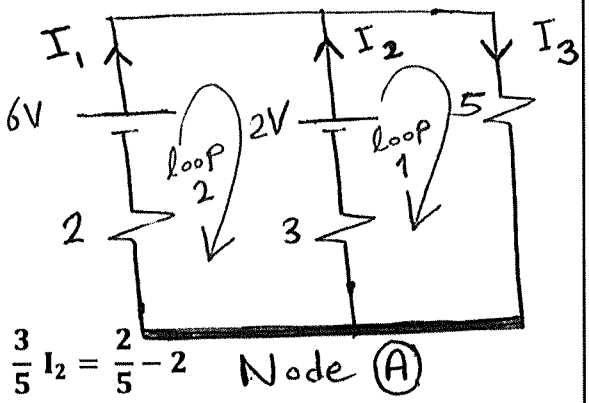

Sloving the three equations (1, 2 & 3):

From (2 & 3) in (1):

$\therefore \; 2 + \frac{3}{2}\,I_2 + I_2 = \frac{2}{5} - \frac{3}{5}\,I_2 \quad \therefore \; \frac{3}{2}\,I_2 + I_2 + \frac{3}{5}\,I_2 = \frac{2}{5} - 2$

$\therefore \; \frac{31}{10}\,I_2 = -\frac{8}{5} \quad \therefore \; I_2 = -\frac{16}{31}\,A = -0.516\,A$

−ve sign means that the actual direction of I_2 is opposite to the assumed in figure

From (3): $\therefore \; I_1 = 2 + \frac{3}{2} \times -0.516 = 1.226\,A$

From (2): $\therefore \; I_3 = \frac{2}{5} - \frac{3}{5} \times -0.516 = 0.71\,A$

$\therefore \; V_{ba} = 6 - 2\,I_1 = 6 - 2 \times 1.226 = 3.55\ \text{Volt}$

41. In the shown circuit:

Calculate:

The value of the current intensities I_1, I_2 and I_3

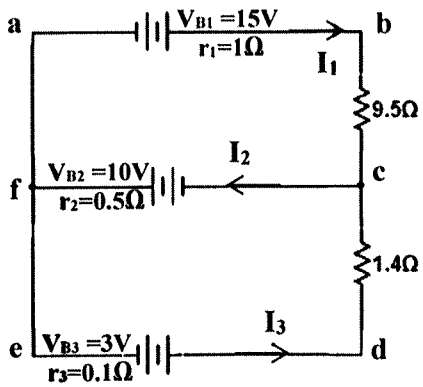

Solution

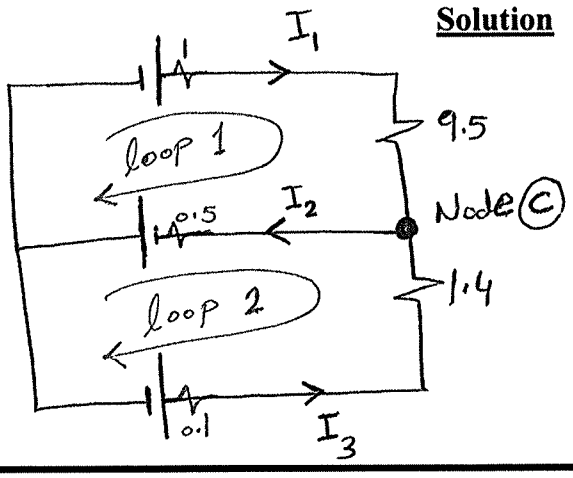

KCL at node (C): $\sum I_{in} = \sum I_{out}$ $\therefore I_1 + I_3 = I_2 \rightarrow (1)$

KVL at loop (1) (abcfa): $\sum V_{\text{any closed loop}} = \text{Zero}$

$\therefore 9.5\,I_1 + 0.5\,I_2 - 10 - 15 + I_1 = 0$ $\therefore 10.5\,I_1 + 0.5\,I_2 - 25 = 0$

$\therefore 10.5\,I_1 = 25 - 0.5\,I_2$ $\therefore I_1 = \frac{25}{10.5} - \frac{0.5}{10.5} I_2 \rightarrow (2)$

KVL at loop (2) (fcdef): $\sum V_{\text{any closed loop}} = \text{Zero}$

$\therefore 10 - 0.5\,I_2 - 1.4\,I_3 - 0.1\,I_3 + 3 = 0$ $\therefore -0.5\,I_2 - 1.5\,I_3 + 13 = 0$

$\therefore 1.5\,I_3 = 13 - 0.5\,I_2$ $\therefore I_3 = \frac{13}{1.5} - \frac{0.5}{1.5} I_2 \rightarrow (3)$

Sloving the three equations (1, 2 & 3):

From (2 & 3) in (1):

$\therefore \frac{25}{10.5} - \frac{0.5}{10.5} I_2 + \frac{13}{1.5} - \frac{0.5}{1.5} I_2 = I_2$ $\therefore I_2 + \frac{0.5}{1.5} I_2 + \frac{0.5}{10.5} I_2 = \frac{25}{10.5} + \frac{13}{1.5}$

$\therefore \frac{29}{21} I_2 = \frac{232}{21}$ $\therefore I_2 = 8\ A$

From (2): $\therefore I_1 = \frac{25}{10.5} - \frac{0.5}{10.5} \times 8 = 2\ A$

From (3): $\therefore I_3 = \frac{13}{1.5} - \frac{0.5}{1.5} \times 8 = 6\ A$

---

42. In the shown circuit:

Calculate:

1. The current intensity in each battery.
2. The potential difference between the two poles of each battery
3. The potential difference on the 5 ohm resistance

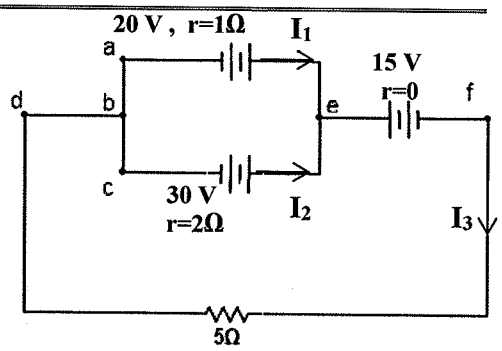

Solution

KCL at node (E): $\sum I_{in} = \sum I_{out}$

$\therefore I_1 + I_2 = I_3 \rightarrow (1)$

KVL at loop (1) (aecba): $\sum V_{\text{any closed loop}} = 0$

$\therefore I_1 - 20 + 30 - 2\,I_2 = 0$

$\therefore I_1 - 2\,I_2 + 10 = 0$

$\therefore I_1 = 2\,I_2 - 10 \rightarrow (2)$

KVL at loop (2) (efdbce):

$\therefore 2\,I_2 - 30 + 15 + 5\,I_3 = 0$

$\therefore 2\,I_2 + 5\,I_3 - 15 = 0$

$\therefore 5I_3 = 15 - 2I_2$ $\therefore I_3 = 3 - \frac{2}{5} I_2 \rightarrow (3)$

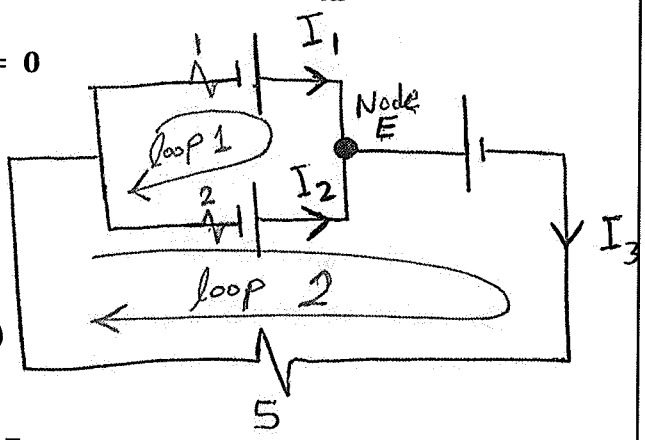

Sloving the three equations (1, 2 & 3):

From (2 & 3) in (1):

$\therefore 2\,I_2 - 10 + I_2 = 3 - {}^{2}/_{5}\ I_2$ $\therefore {}^{17}/_{5}\ I_2 = 13$ $\therefore I_2 = 3.82\ A$

From (2): $\therefore I_1 = 2 \times 3.82 - 10 = -2.35\ A$

−ve sign means that the actual direction of I_2 is opposite to the assumed in figure

From (3): $\therefore I_3 = 3 - \frac{2}{5} \times 3.82 = 1.47\ A$

$$V = V_B \pm I \times r$$

V : P.d between poles of any battery
V_B : Electromotive force of same battery
I : Electric current intensity passing through same battery (substitute with calculated value with its sign)
r : Internal resistance of same battery

b. $\therefore\ V_{20V} = V_B - I_1 r = 20 - (-2.35) \times 1 = 22.35$ Volt

Note: $V > V_B$ So 20V battery is being charged (في حالة شحن)

$\therefore\ V_{30V} = V_B - I_2 r = 30 - (3.82) \times 2 = 22.36$ Volt

Note: $V < V_B$ So 30V battery is being discharged (في حالة تفريغ)

$\therefore\ V_{15V} = V_B + I_3 r = 15 + (1.47) \times 0 = 15$ Volt

Note: 15V battery is being charged (في حالة شحن)

c. $\therefore\ V_{5\Omega} = 5 I_3 = 5 \times 1.47 = 7.35$ Volt

43. In the shown circuit (by using Kirchhoff's laws): Calculate:

1. The electromotive force (V_{B2})
2. The current intensity (I) knowing that ($V_{BA} = 5$ V)

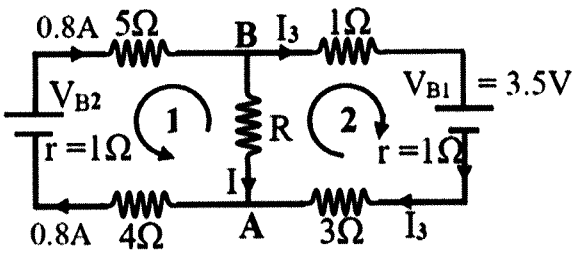

Solution

KVL at loop (1): $\sum V_{\text{any closed loop}} = 0$

$\therefore\ -IR - 0.8 \times 5 + V_{B2} - 0.8 \times r - 0.8 \times 4 = 0$

$\therefore\ V_{AB} - 0.8 \times 5 + V_{B2} - 0.8 \times r - 0.8 \times 4 = 0$

$\therefore\ -5 - 0.8 \times 5 + V_{B2} - 0.8 \times 1 - 0.8 \times 4 = 0$

$\therefore\ V_{B2} = 13$ Volt

KVL at loop (2):

$\therefore\ V_{B1} + I_3 r + 3 I_3 - IR + 1 \times I_3 = 0$

$\therefore\ V_{B1} + I_3 r + 3 I_3 + V_{AB} + 1 \times I_3 = 0$

$\therefore\ 3.5 + 1 \times I_3 + 3 \times I_3 - 5 + 1 \times I_3 = 0$

$\therefore\ I_3 = \frac{3}{10}$ A

KCL at node (B): $\sum I_{in} = \sum I_{out}$

$\therefore\ 0.8 = I + I_3$

$\therefore\ I = 0.8 - \frac{3}{10} = 0.5$ A

If R is required: $\therefore\ V_{BA} = IR$ $\therefore\ 5 = 0.5 \times R$ $\therefore\ R = \frac{5}{0.5} = 10\ \Omega$

44. The opposite circuit represents a part of an electric circuit. By using kirchhoff's laws and taking into account the current direction paths, and the shown labels, calculate: (neglegting the internal resistance of the two sources)

1. Potential difference across X, Y
2. Emf of the battery V_{B2}

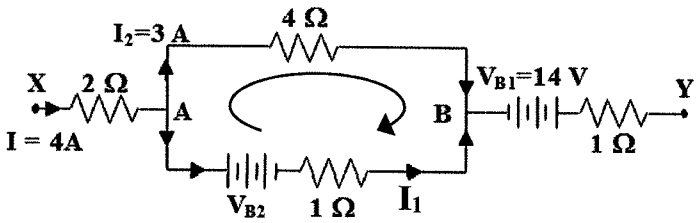

Solution

1. $V_{XY} = 2I + 4I_2 - V_{B1} + 1 \times I = 2 \times 4 + 4 \times 3 - 14 + 1 \times 4 = 10$ Volt
2. $\because I_1 = I - I_2 = 4 - 3 = 1$ A

   KVL at shown closed loop: $\sum V_{\text{any closed loop}} = 0$

   $\therefore -V_{B2} + 4I_2 - 1 \times I_1 = 0$

   $\therefore V_{B2} = 4I_2 - 1 \times I_1 = 4 \times 3 - 1 \times 1 = 11$ Volt

---

45. In the shown circuit:

Calculate:

1. The Value of V_2 and I_1
2. The power of the 100 V source

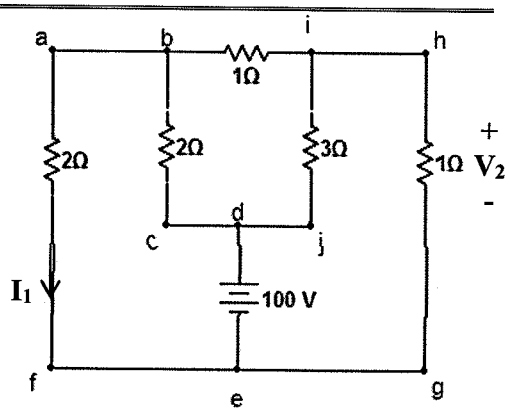

Solution

We will reduce the problem to be 3 equations in 3 unkowns only

KVL at loop (2): $\sum V_{\text{any closed loop}} = \text{Zero}$

$\therefore -2I_1 - 2I_4 + 100 = 0 \rightarrow (1)$

KCL at node (A): $\sum I_{in} = \sum I_{out}$

$\therefore I_1 + I_6 = I_4 \rightarrow (2)$

KCL at node (H):

$\therefore I_5 + I_6 = I_2 \qquad \therefore I_5 = I_2 - I_6 \rightarrow (3)$

KVL at loop (1): $\therefore 3I_5 + I_2 - 100 = 0 \rightarrow (4)$

From (3) in (4):

$\therefore 3(I_2 - I_6) + I_2 - 100 = 0$

$\therefore 4I_2 - 3I_6 - 100 = 0$

$\therefore I_2 = \frac{3}{4} I_6 + 25 \rightarrow (5)$

KVL at loop (4): $\therefore -2I_1 + I_6 + I_2 = 0 \rightarrow (6)$

From (5) in (6):

$\therefore -2I_1 + I_6 + \frac{3}{4} I_6 + 25 = 0 \qquad \therefore -8I_1 + 4I_6 + 3I_6 + 100 = 0$ (E)

$\therefore -8I_1 + 7I_6 + 100 = 0 \rightarrow (7)$

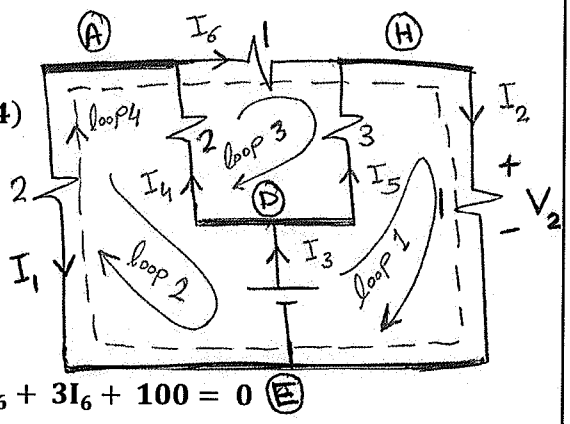

Sloving the three equations (1), (2) and (7):

a. $\therefore I_1 = \frac{225}{11}$ A $\qquad \therefore I_4 = \frac{325}{11}$ A $\qquad \therefore I_6 = \frac{100}{11}$ A

From (3) & (2): $\therefore I_2 = \frac{350}{11}$ A $\qquad \therefore I_5 = \frac{250}{11}$ A $\qquad \therefore V_2 = 1 \times I_2 = \frac{350}{11}$ Volt

KCL at node (D): $\therefore I_3 = I_4 + I_5 = \frac{325}{11} + \frac{250}{11} = \frac{575}{11}$ A

$\therefore$ Power of 100 V source $= 100 \times I_3 = 5227.2727$ Watt

46.

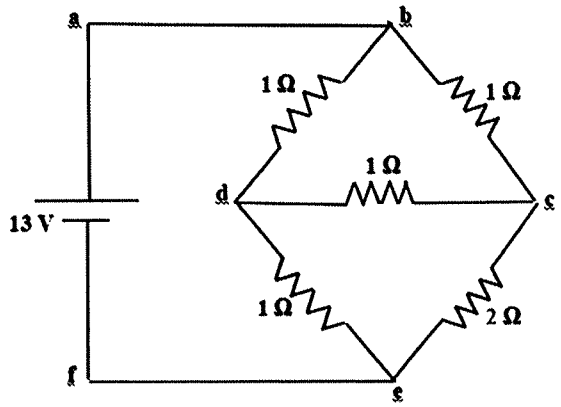

Calculate:

The equivalent resistance of the shown circuit using KCL and KVL.

Solution

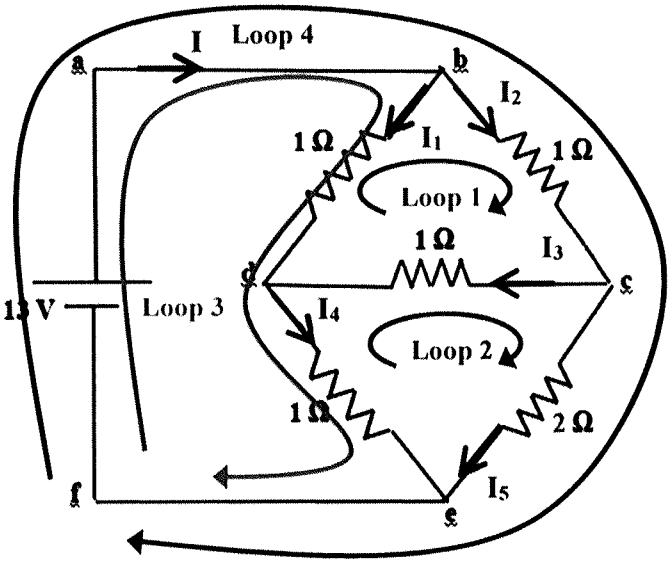

We will reduce the problem to be 3 equations in 3 unkowns only

KCL at node (D):

$\therefore\ I_1 + I_3 = I_4 \quad \rightarrow (1)$

KVL at loop (3):

$\therefore\ I_1 + I_4 - 13 = 0 \quad \rightarrow (2)$

KVL at loop (4):

$\therefore\ I_2 + 2I_5 - 13 = 0$

$\therefore\ I_2 = 13 - 2I_5 \quad \rightarrow (3)$

KCL at node (C):

$\therefore\ I_2 = I_3 + I_5 \quad \rightarrow (4)$

From (3) in (4):

$\therefore\ 13 - 2I_5 = I_3 + I_5$

$\therefore\ 13 - I_3 = 3I_5$

$\therefore\ I_5 = \frac{13}{3} - \frac{1}{3}I_3 \quad \rightarrow (5)$

KVL at loop (2):

$\therefore\ 2 \times I_5 - I_4 - I_3 = 0 \quad \rightarrow (6)$

From (5) in (6):

$\therefore\ 2 \times \left(\frac{13}{3} - \frac{1}{3}I_3\right) - I_4 - I_3 = 0$

$\therefore\ 26 - 2I_3 - 3I_4 - 3I_3 = 0$

$\therefore\ 26 - 5I_3 - 3I_4 = 0 \quad \rightarrow (7)$

Sloving the three equations (1), (2) and (7):

$\therefore\ I_1 = 6\ A \qquad \therefore\ I_3 = 1\ A \qquad \therefore\ I_4 = 7\ A$

$\therefore\ I_5 = \frac{13 - I_3}{3} = \frac{13 - 1}{3} = 4\ A$

KCL at node (e): $\quad \therefore\ I = I_4 + I_5 = 7 + 4 = 11\ A$

$\therefore\ R_{eq} = \frac{V}{I} = \frac{13}{11} = 1.18\ \Omega$

47. The ohmic resistance is determined for a number of wires of the same metal, each of cross-section area 0.0025 cm^2 but having different length . The following results are obtained :

The resistance R (Ω)	5	10	20	35	40	50
The length L (m)	0.5	1	2	3.5	4	5

Plot a graph relating the ohmic resistance of the wire R on the Y-axis and the length L on the X-axis. From the graph find:

a. The resistance of a wire of the same metal and of the same cross-section area and of length 4.7 m.

b. The resistivity of the wires material .

Solution

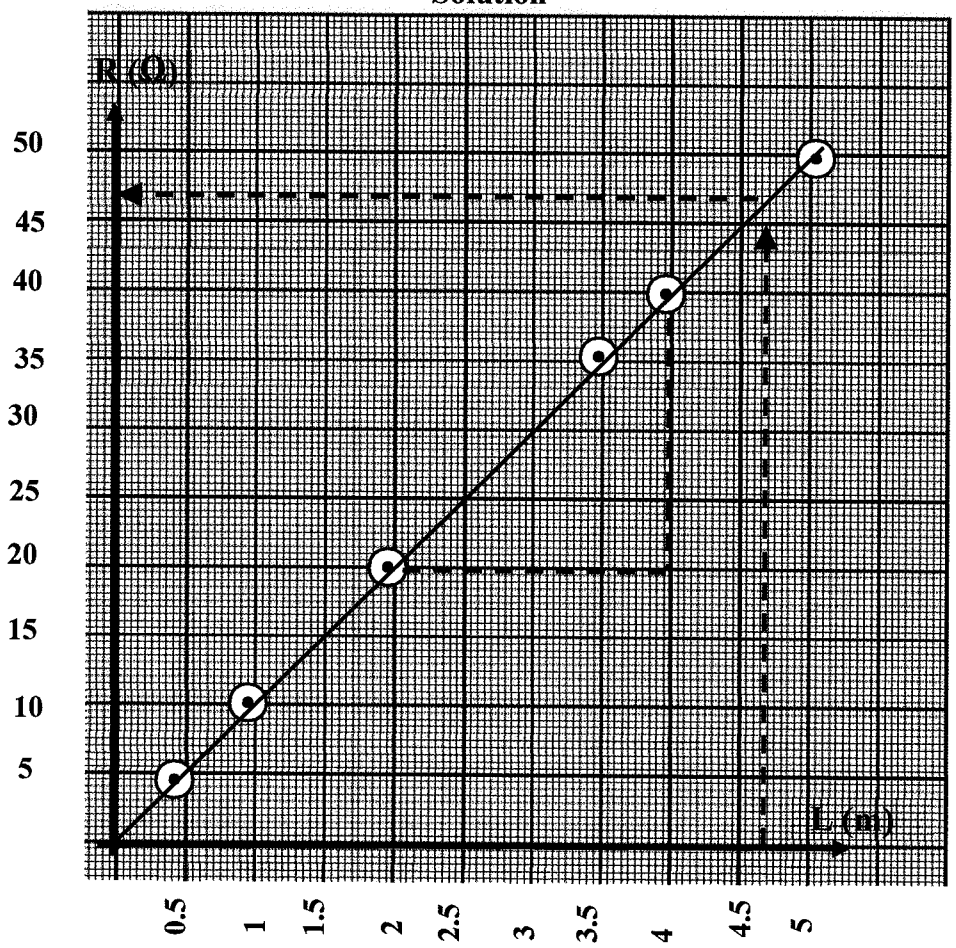

$$Slope = \frac{R}{L} = \frac{40 - 20}{4 - 2} = 10 = \frac{\rho}{A}$$

a. From the graph : R = 47 Ω

b. $\rho = \frac{RA}{L} = Slope \times A = 10 \times 0.0025 \times 10^{-4} = 2.5 \times 10^{-6}\ \Omega.m$

What is meant by each of the following?

1. Electric current intensity in a conductor = 3 A
   3 coulomb is the quantity of electric charge passing through the conductor in one second
2. Charge of 50 coulombs pass in 10 seconds through a point
   The electric current intensity at this point = $Q/t = 50/10 = 5$ Ampere
3. Potential difference between two points is 9 V
   The work done to transfer a charge of one coulomb between the two points = 9 Joules
4. The work done to transfer an electric charge of 60 coulombs between two points in an electric circuit equals 300 joules
   The potential difference between the two points = $W/Q = 300/60 = 5$ Volts.
5. Specific resistance of copper = 1.7×10^{-8} Ω.m
   The resistance of a copper conductor of unit length and unit cross-section area is 1.72×10^{-8} Ω
6. Electric conductivity of copper = 58×10^{6} $\Omega^{-1}.m^{-1}$
   The reciprocal (inverse) of electric resistivity of copper = 58×10^{6} $\Omega^{-1}.m^{-1}$
   <u>OR:</u> The resistance of a copper conductor of unit length and unit cross-section area
   $= \frac{1}{58\times10^{6}} = 1.72 \times 10^{-8}$ Ω
7. Electric resistance of a conductor = 40 Ω
   The ratio between the potential difference across the conductor and the electric current intensity passing through it is 40 V/A
8. The ratio between the potential difference across a conductor terminals and the electric current intensity passing through it = 100 V/A
   The electric resistance of this conductor = 100 Ω
9. The electric resistance of a copper conductor of unit length and unit cross-sectional area = 1.7×10^{-8} Ω
   The electric resistivity of copper = 1.7×10^{-8} Ω.m
   <u>OR:</u> The electric conductivity of copper = $\frac{1}{1.7\times10^{-8}} = 58 \times 10^{6}$ $\Omega^{-1}.m^{-1}$
10. The reciprocal (inverse) of electric resistivity of copper material = 58×10^{6} $\Omega^{-1}.m^{-1}$
    The electric conductivity of copper = 58×10^{6} $\Omega^{-1}.m^{-1}$
11. The energy consumed by an electric device each minute = 120 kJ
    The electric power of this device = $\frac{W}{t} = \frac{120\times10^{3}}{1\times60} = 2000$ watt
12. Electromotive force of a battery = 24 Volt
    The total work done to transfer a unit charge throughout the circuit outside and inside the source = 24 Joules
    <u>OR:</u> 24 Volts is the potential difference between the two poles of the source when the circuit is opened (when no current passes).
13. The total work done to transfer a charge of 1 C through the whole circuit = 15 joules
    The electromotive force of the battery = 15 Volt

14. The potential difference across an electric cell when no current flows equals 3 volt
The electromotive force of this cell = 3 Volt

15. Ohm's law for closed circuit
The E.M.F of a cell is defined as the total work done to transfer a charge of one coulomb through the circuit outside and inside the source. If we denote the equivalent resistance of the external circuit by (R) and the internal resistance of the battery by (r), then:

$$\text{emf} = \text{P.d across external circuit} + \text{P.d across internal resistance of battery}$$
$$= IR + Ir$$
$$\therefore I = \frac{V_B}{R + r}$$

16. The equivalent resistance for a group of resistances connected together = 10 Ω
If these resistances are replaced by a single resistance of 10 Ω, the current intensities and the potential differences in the circuit remain unchanged.

17. Series connection of resistors
It is the connection where the currents in all resistors are constant and the voltage is divided with respect to the resistors value. ($R_{eq} = R_1 + R_2 + R_3$)

18. Parallel connection of resistors
It is the connection where the voltage on all resistors is constant and the current is divided with respect to the resistors value. ($\frac{1}{R_{eq}} = \frac{1}{R_1} + \frac{1}{R_2} + \frac{1}{R_3}$)

19. Equivalent resistance
It is the resistance that if we replace all the circuit resistances by it the current intensities and the potential differences in the circuit (power) will stay constant

20. A lamp is marked 220 Volt – 150 watt
This meant that this lamp consumes 150 joules each second when operating on a potential difference of 220 and the current intensity = $150/220 = 0.68$ A

21. Joule
It is the work done to transfer a charge of 1 coulomb through a conductor when the potential difference across it is 1 Volt

22. Watt
It is the electric power when 1 Joule is the energy consumed in one second

Give reasons for each of the following:

1. Rheostats are used in electric circuits
   To control the value of electric current intensity in the circuits
2. The resistance of a wire and its resistivity increases as the temperature increases
   Because as the temperature increases, the amplitude of vibrations of conductor atoms increases and moving electrons suffer more collisions with the conductor atoms. Therefore motion of electrons will be more difficult and the resistance of conductor increases
3. When the length of the wire increases , its resistance increases
   Because the wire is considered as consists of more than one resistance connected in series, so (R α L) when kind, Cross sectional area & temperature are constants
4. When the cross sectional area of a conductor increases, its resistance will decrease
   Because the wire is considered as consists of more than one resistance connected in parallel, so (R α $^1/_A$) when kind, length & temperature are constants
5. The electric conductivity of material decreases with resistivity increasing
   Because conductivity is the inverse of electric resistivity $\sigma = {}^1/_\rho$
6. Some metals conduct electricity while others are considered as insulators
   Electrical conductivity of most metals (as Cu, Al, ...) is very high because they contain large number of free electrons. But insulators contain no free electrons so its conductivity is very low (resistivity is very high)
7. The home electrical devices are not connected in series <u>(OR)</u> the home electrical devices are connected in parallel
   When connected in parallel:
   1- The current is divided on them, so when current is cut off in one device, the other devices are still working, and do not be affected
   2- In parallel connection the potential difference across all the devises will be constant
   3- Also parallel connection decreases the total resistance
   , But in series connection the three above items are the opposite

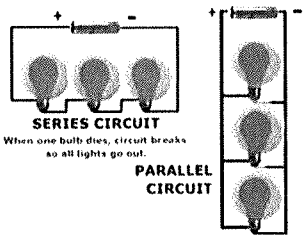

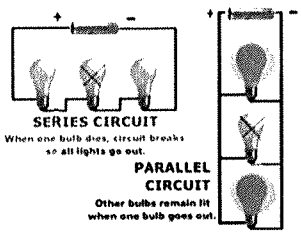

8. If the filament of a lamp in the house is cute off, the other lamps still lighten
   The lamps in the house are connected in parallel so the current flowing in each is different and if one of them is cutoff the others will be working.

9. We should know the power of each electric device in our homes
For not exceeding the safety limit of current to avoid burning of the fuse, where the power is directly proportional with current passing in home circuit, ($P = V \times I$) because the potential difference in home is constant.
If the current increases above the safety limit of the fuse, the fuse will melt leading to cut off the electricity.

10. The terminal potential of a battery is less than the emf of such a battery
Due to the lost potential difference (Voltage drop) on the internal resistance of the battery (Ir), where $V = V_B - Ir$

11. Doubling the radius of a copper wire leads to decreasing its resistance to one quarter
$r_1 = r$, $r_2 = 2r$ $\because \frac{R_1}{R_2} = \frac{A_2}{A_1} = \frac{\pi r_2^2}{\pi r_1^2}$ $\therefore \frac{R_1}{R_2} = \frac{r_2^2}{r_1^2} = \frac{(2r)^2}{(r)^2} = \frac{4 \times r^2}{r^2} = 4$ $\therefore R_2 = \frac{1}{4} R_1$

12. Efficiency of battery increases as its internal resistance decreases
Since efficiency of the battery $= \frac{V}{V_B} \times 100$ and $V = V_B - Ir$
, So as (r)decrese (I)increase , but (Ir) decrese $\therefore$ V increase
$\therefore$ Efficiency of battery increase

13. In electric circuits connected in parallel, thick wire are used at the ends of the battery , but at the ends of each resistor less thick wires are used
Because the current intensity in parallel circuits is greater at the input and output of batteries (so need thick wires) compared to the current in each branch, this high current will be divided the each branch (so need less thick wires)

14. If the electric circuit is switched off, the potential difference between the two poles of the source equals its EMF.
$\because V = V_B - Ir$, so when the circuit is switched off $I = 0$, $Ir = 0$, so $V = V_B$

15. The electric conductivity of different materials is different
Because the electric conductivity of a material is a physical property depends on kind of material due to difference in concentration of free electrons and its temperature

16. Thick wire is used to connect a high power air conditioner in your house.
As ($P = V \times I$) , So $P \alpha I$ at constant voltage in the house (220 V)
,So thick wire should be used to carry this large current by small resistance

17. The electric conductivity of copper is high.
Because the electric resistivity of copper is very low and $\sigma = {}^{1}/_{\rho}$ and because copper has large number of free electrons

18. The electric power (or electric energy) consumed increases by increasing the resistance if we can make the current remains constant
As Power $= \frac{\text{energy}}{\text{time}} = V \times I = I^2R$, so when (I) is constant $\therefore$ Power α R

19. The electric power (or electric energy) consumed increases by decreasing the resistance if it is connected to the same voltage source.

As Power $= \frac{\text{energy}}{\text{time}} = V \times I = \frac{V^2}{R}$, so when (V) is constant $\therefore$ Power $\alpha \frac{1}{R}$

20. The electric power (or electric energy) consumed increases in our homes if more lamp is switched on.

Because in our homes the voltage is constant (220 V) and all the lamps and instruments are connected in parallel so by switching on more lamps which means adding resistances in parallel, so the total resistance decreases and

as Power $= \frac{\text{energy}}{\text{time}} = V \times I = \frac{V^2}{R}$, so when (V) is constant $\therefore$ Power $\alpha \frac{1}{R}$

21. The equivalent resistance of connecting resistors in parallel is small

Because for n resistance connected in parallel the equivalent resistance:

$$\frac{1}{R_{eq}} = \frac{1}{R_1} + \frac{1}{R_2} + \frac{1}{R_3} + \cdots \ldots\ldots\ldots\ldots + \frac{1}{R_n}$$

22. The equivalent resistance of connecting resistors in series is large

Because for n resistance connected in series the equivalent resistance:

$$R_{eq} = R_1 + R_2 + R_3 + \cdots \ldots\ldots + R_n$$

23. When the total power of the electrical instruments used in houses exceeds a certain value, electric current intensity flowing through the fuse increases

Because the power in homes = V×I, and since V is constant, so P α I at constant V

As the power increases, the current in the fuse increases

24. To obtain a small resistance from a group of large resistances, the group is connected in parallel

Because for n resistance connected in parallel the equivalent resistance:

$$\frac{1}{R_{eq}} = \frac{1}{R_1} + \frac{1}{R_2} + \frac{1}{R_3} + \cdots \ldots\ldots\ldots\ldots + \frac{1}{R_n}$$

, So the total resistance is smaller than the smallest one

25. A metal cuboid has more than one resistance at the same temperature, but a cube one has only one

Because the cuboid has more than one face different in area and length according to the way of connection, but the faces of the cube are of equal area and constant length whatever the way of connection

Write down the mathematical formula which represented by this graphs and what does the slope mean:

Graph	Mathematical formula	Slope means
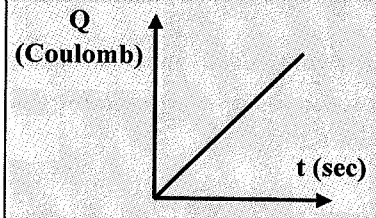	$I = \frac{Q}{t}$	$\text{Slope} = \frac{Q}{t} = I$
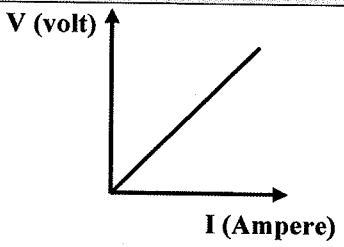	$V = IR$	$\text{Slope} = \frac{V}{I} = R$
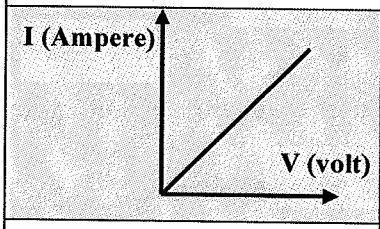	$V = IR$	$\text{Slope} = \frac{I}{V} = \frac{1}{R}$
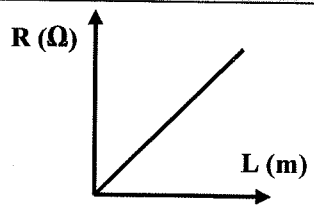	$R = \rho_e \frac{L}{A}$	$\text{Slope} = \frac{R}{L} = \frac{\rho_e}{A}$
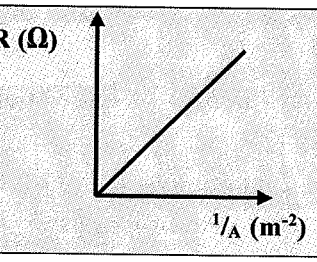	$R = \rho_e \frac{L}{A}$	$\text{Slope} = \frac{R}{1/A} = R\,A = \rho_e L$
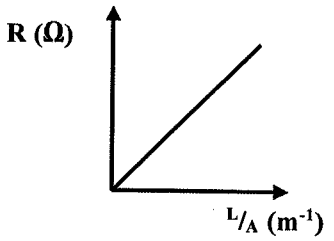	$R = \rho_e \frac{L}{A}$	$\text{Slope} = \frac{R}{L/A} = \frac{RA}{L} = \rho_e$

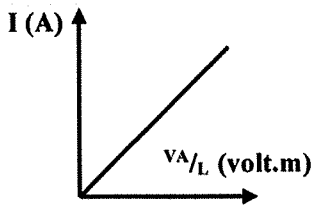	$R = \rho_e \frac{L}{A} = \frac{V}{I}$	$\text{Slope} = \frac{I}{VA/L} = \frac{IL}{VA} = \frac{1}{\rho_e} = \sigma$
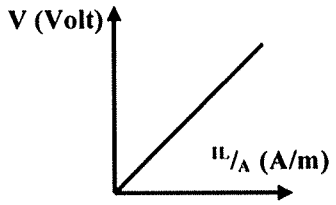	$R = \rho_e \frac{L}{A} = \frac{V}{I}$	$\text{Slope} = \frac{V}{IL/A} = \frac{VA}{IL} = \rho_e$
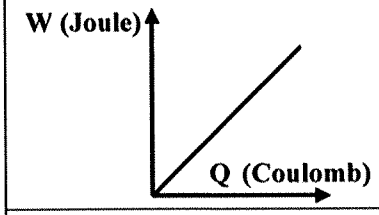	$V = \frac{W}{Q}$	$\text{Slope} = \frac{W}{Q} = V$
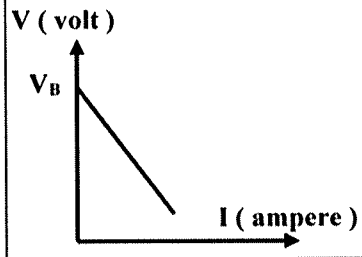	$V = V_B - Ir$	$\text{Slope} = \frac{V - V_B}{I} = -r$
For two wires A & B: 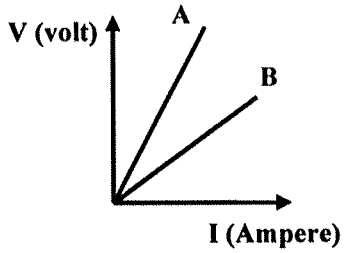	$V = IR$ $\text{Slope} = \frac{V}{I} = R$	$\because\ \theta_A > \theta_B$ $\therefore\ \tan(\theta_A) > \tan(\theta_B)$ $\therefore\ \text{Slope}_A > \text{Slope}_B$ $\therefore\ (R)_A > (R)_B$ $\therefore\ (L)_A > (L)_B$ If ρ_e & A are constants $\therefore\ (\rho)_A > (\rho)_B$ If L & A are constants $\therefore\ (A)_A < (A)_B$ If ρ_e & L are constants
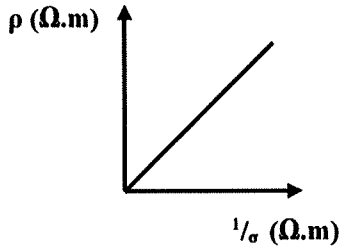	$\sigma = \frac{1}{\rho}$	$\text{Slope} = \frac{\rho}{1/\sigma} = \rho\,\sigma = 1$

Remarks & Notes

CHAPTER (2)

Magnetic Effects of Electric Current and Measuring Instruments

Introduction

In 1819, Hans Christian Oersted (a Danish physicist) brought a compass near a wire carrying an electric current. He noticed that the compass was deflected. When he turned the current off, the compass returned its original position. The deflection of the compass while current was flowing through the wire indicated that it was being acted upon by an external magnetic field.

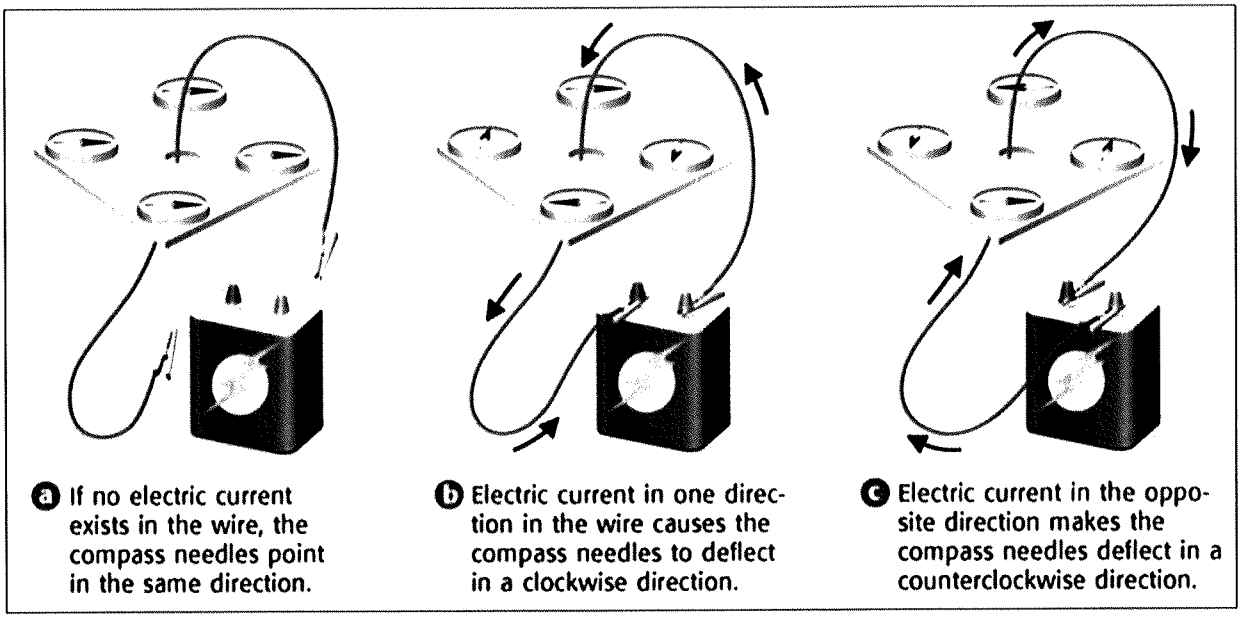

In this chapter we are going to study the magnetic field of current carrying conductors in the form of:

a) Straight wire. b) Circular loop. c) Solenoid.

Magnetic Field:

- **Defined as the region around the magnet at which magnetic forces are detected.**
- **It is represented by magnetic flux lines.**

Magnetic Flux Lines: (φ_m)

- **Magnetic flux lines originate from "N" pole and terminate at the "S", they are supposed to continue inside the magnet from "S" pole to "N" pole.**
- **The magnetic field is stronger near the poles where the flux lines are more crowded and close to each other.**
- **To describe the strength of the magnetic field at a point, we define the physical quantity magnetic flux density (B).**

Magnetic field due to a bar magnet

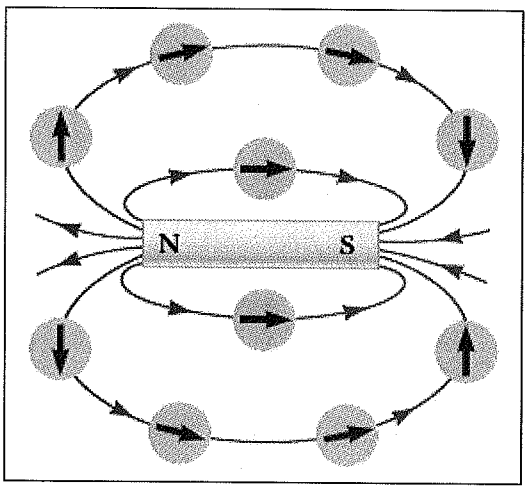

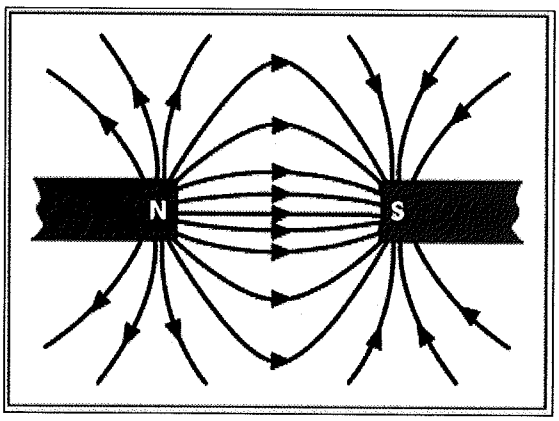

Magnetic flux lines between two unlike poles

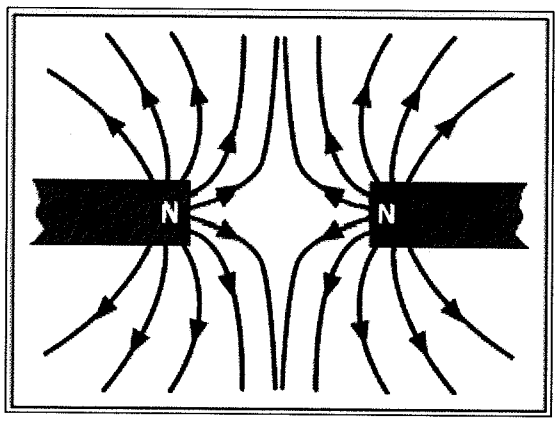

Magnetic flux lines between two like poles

Magnetic Flux Density: (B)

It is the number of magnetic flux lines passing normally through a unit area.

$$B = \frac{\varphi_{\perp}}{A} \rightarrow (1)$$

Where:

B ≡ Magnetic flux density at a point (Tesla = T = $\frac{\text{Weber}}{m^2}$)

$\varphi_{\perp}$ ≡ Number of magnetic flux lines cutting normally the area (Weber = Wb)

A ≡ Cross section area (m^2)

Tesla:

It is the magnetic flux density when one weber is the number of magnetic flux lines passing normally through unit area.

If the magnetic field not normal to the area
We always concern with the normal magnetic flux lines

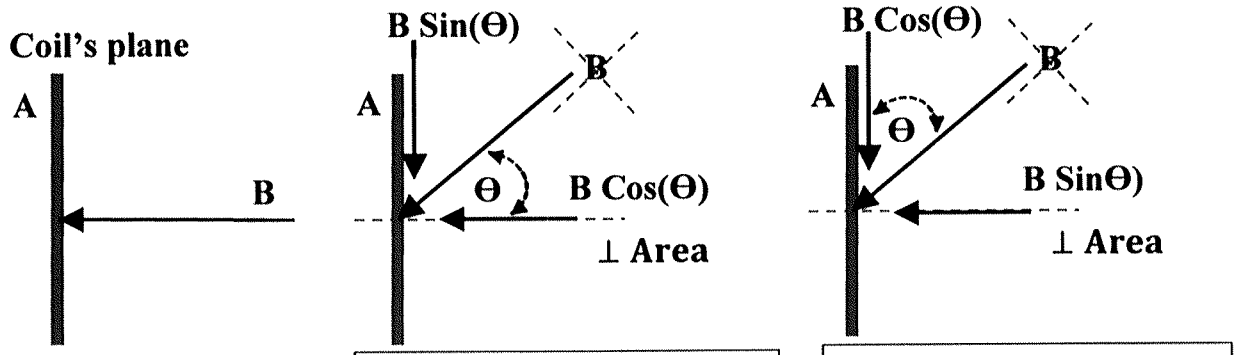

$$\varphi_{\perp} = B\,A$$

$$\varphi_{\perp} = B\,A\,\cos(\theta)$$

Θ : is the angle between Magnetic Field & Normal to coil's plane

$$\varphi_{\perp} = B\,A\,\sin(\theta)$$

Θ : is the angle between Magnetic Field & Coil's plane

The uniform magnetic field

- **It is constant in both magnetic flux density and direction.**
- **It is represented by flux lines, which are equally spaced and pointing in the same direction.**

(B) Out of the paper

(B) Into the paper

Magnetic field due to current in a long straight wire

Shape:

We can examine the pattern of the flux density surrounding a long straight wire carrying a direct current using iron filings sprinkled on a paper surrounding the wire in a vertical position. It will be noted that they become aligned in concentric circles around the wire, its center is the center of the wire.

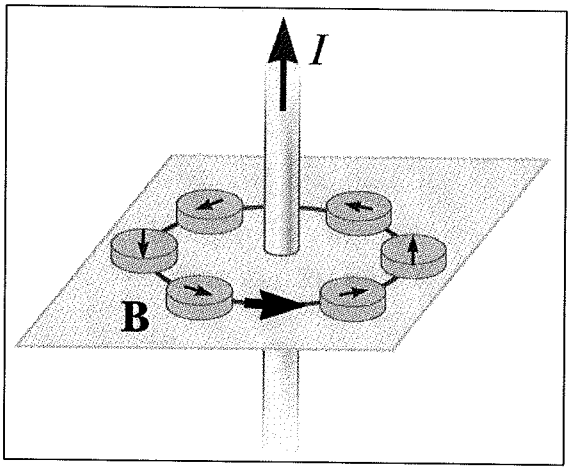

1. The circular magnetic flux lines are closer together near the wire and farther apart from each other as the distance from the wire increases.
2. As the electric current in the wire increases, the iron filings rearrange themselves such that the concentric circles become more crowded.
3. This indicates that the magnetic field due to the electric current passing through a straight wire increases with increasing the current intensity.

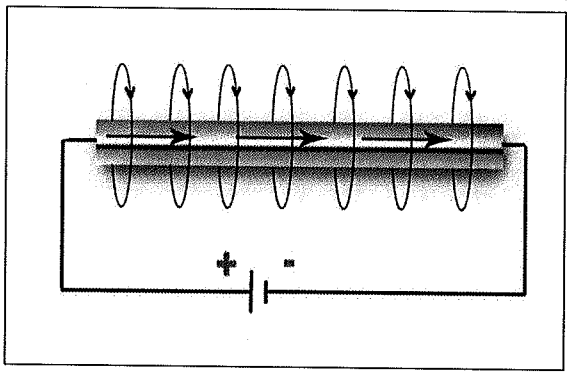

Mathematical Formula:

$$B = \frac{\mu}{2\pi}\frac{I}{d} \rightarrow (2) \quad \text{(Ampere's circuital law)}$$

Where:

B ≡ Magnetic flux density at any point at a normal distance (d) from the center of the wire (Tesla = T = $\frac{\text{Weber}}{m^2}$)

μ ≡ Magnetic permeability of the medium ($\frac{T.\,m}{A} = \frac{\text{Weber}}{A.\,m}$)

I ≡ Electric current intensity passing through the wire (A)

d ≡ Normal distance from the center of the wire to the point at which we calculate magnetic flux density (m)

Factors affecting magnetic flux density of a straight wire carrying current:

1. Electric current intensity passing through the wire. $B \propto I$
2. Normal distance from the center of the wire to the point $B \propto \frac{1}{d}$
3. The permeability of the medium

Direction of magnetic flux density of a straight wire carrying current:

Ampere's right hand rule: (A.R.H.R)

Use: Rule used to determine the direction of magnetic field around a long straight wire carrying electric current.

Define: Imagine that the wire to be in your right hand such that the thumb points in the direction of the current, so the rest of the fingers give the direction of the magnetic field.

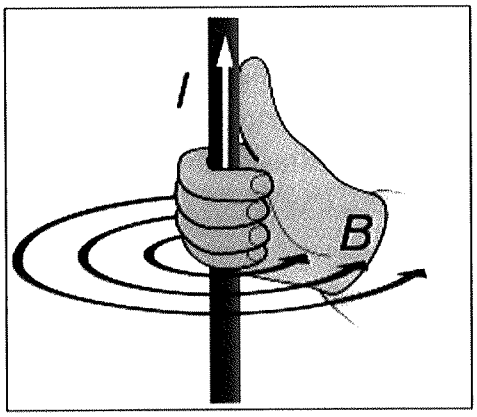

Magnetic field due to current in a circular loop

Shape:

If a wire is bent into a circular loop and connected to a source of current, the magnetic field produced is very similar to that of a short bar magnet. One face of the loop where the direction of the current is clockwise behave as a South Pole and the other face where the direction of the current is counter clockwise behaves as a North Pole.

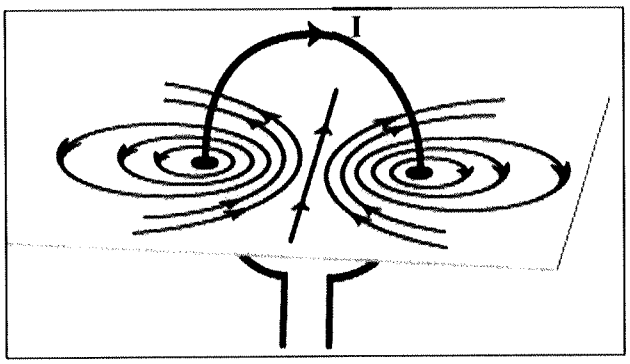

To study the magnetic field due to a circular loop (or a coil), iron filings are sprinkled on the board. Tapping it gently, the filings arrange themselves as:

1. The flux lines near the center of the loop are no longer circular.
2. The magnetic flux density changes from point to point.
3. The magnetic flux lines at the center of the loop are straight parallel lines perpendicular to the plane of the coil. This means that the magnetic field in this region is uniform.

Mathematical Formula:

$$B = \frac{\mu N I}{2 r} \rightarrow (3)$$

Where:

B ≡ Magnetic flux density at the center of the circular coil carrying current ($T = \frac{Wb}{m^2}$)

μ ≡ Magnetic permeability of the medium ($\frac{T.m}{A} = \frac{Weber}{A.m}$)

N ≡ Number of turns of the circular coil (turn)

I ≡ Electric current intensity passing through the circular coil (A)

r ≡ Radius of the circular coil (m)

Factors affecting magnetic flux density at the center of a circular loop carrying current:

1. Number of turns of the circular loop. $B \alpha N$
2. Electric current intensity passing through the circular loop. $B \alpha I$
3. Radius of the circular loop. $B \alpha \frac{1}{r}$
4. The permeability of the medium

Direction of magnetic flux density at the center of a circular loop carrying current:

Right-hand screw rule: (R.H.S.R)

Use: Rule used to determine the direction of magnetic field at the center of a circular coil carrying electric current.

Define: Imagine a right hand screw being screwed to tie along the wire in the direction of the current. The direction of fastening of the screw gives the direction of the magnetic flux at the center of the loop. Thus, a circular loop carrying current acts as a magnetic dipole or a bar magnet.

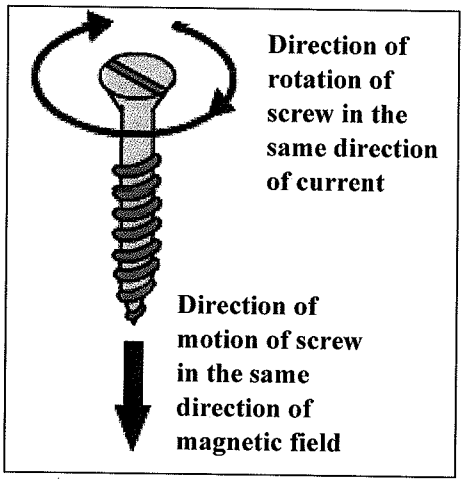

End rule:

Define: One face of the loop where the direction of the current is clockwise behave as a South Pole and the other face where the direction of the current is counter clockwise behaves as a North Pole.

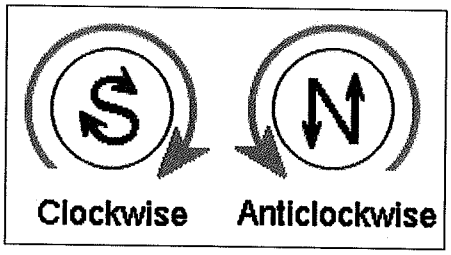

Magnetic field due to current in a solenoid

Shape:

When an electric current is passed through a solenoid (a long spiral or cylindrical coil), the resultant magnetic flux is very similar to that as a bar magnet. The magnetic flux lines make a complete circuit inside and outside the coil, i.e. each line is a closed path. The side at which the flux emerges is the North Pole, the other side where the magnetic flux reenters is the South Pole.

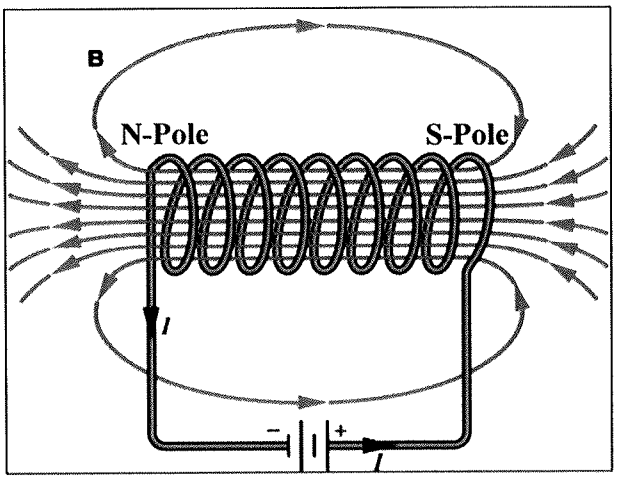

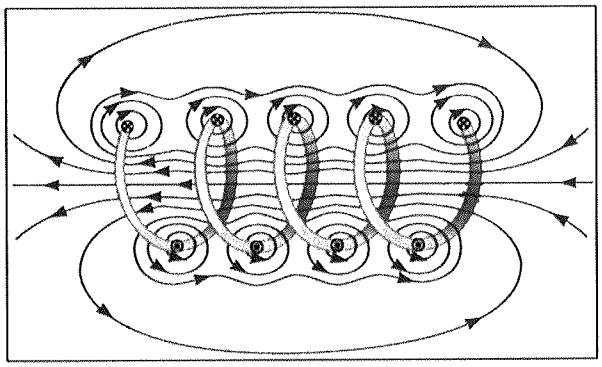

Mathematical Formula:

$$B = \mu \frac{N}{L} I = \mu n I \quad \rightarrow (4)$$

Where:

B ≡ Magnetic flux density in the interior of a solenoid carrying current ($T = Wb/m^2$)

μ ≡ Magnetic permeability of the medium ($T.m/A = Wb/A.m$)

N ≡ Number of turns of the solenoid (turn)

I ≡ Electric current intensity passing through the solenoid (A)

L ≡ The length of the solenoid (m)

n ≡ Number of turns per unit length of the solenoid (turn/m)

Factors affecting magnetic flux density of a solenoid:

1. Number of turns of the solenoid. $B \propto N$
2. Electric current intensity passing through the solenoid. $B \propto I$
3. The length of the solenoid. $B \propto 1/L$
4. The permeability of the medium.

Direction of magnetic flux density of a solenoid:

Right-hand screw rule:

Use: Rule used to determine the polarity of a solenoid carrying a current.

Define: Same as in circular coil

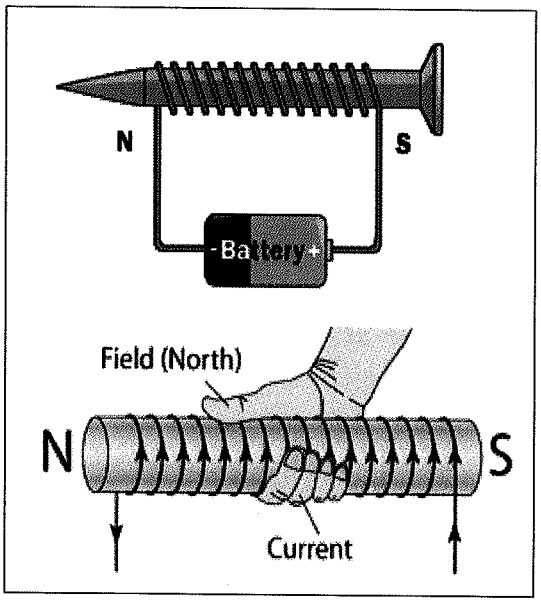

We can also use:

Ampere's right hand rule: (A.R.H.R)

But,

1. If the fingers points to the direction of rotation of the current.
2. , So the thumb will points to the direction of the North Pole.

Very very important notes for problems

1. If the wire has a radius (r), so the magnetic flux density at a point at a normal distance (d) from the center of the wire calculated from the relation

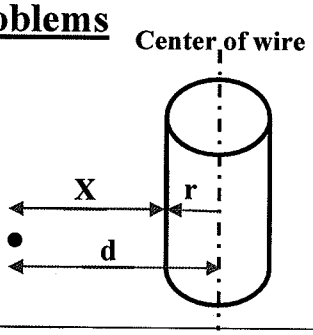

$$B = \frac{\mu}{2\pi}\frac{I}{d} \quad , \quad \text{Where} \quad d = X + r$$

2. The electric current intensity passing through a conductor connected to a battery is calculated as discussed in chapter (1), then we calculate (B) at a point.

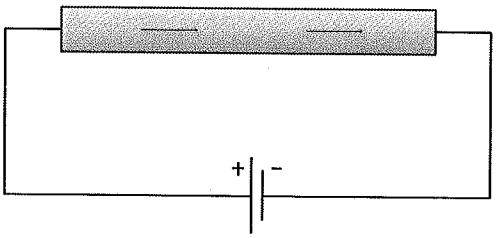

$$B = \frac{\mu}{2\pi}\frac{I}{d} \ , \ I = \frac{V_B}{R_{wire} + r} \ , \ R_{wire} = \rho\frac{L}{A}$$

3. If stated in a problem that the electrons flow in a certain direction in a wire, so the current (I) at which we deal flows in the opposite direction in this wire.

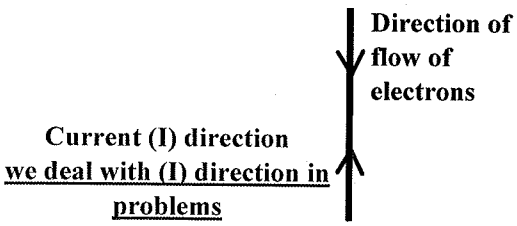

4. Resultant magnetic field due to two parallel wires carrying currents in the <u>same</u> direction:

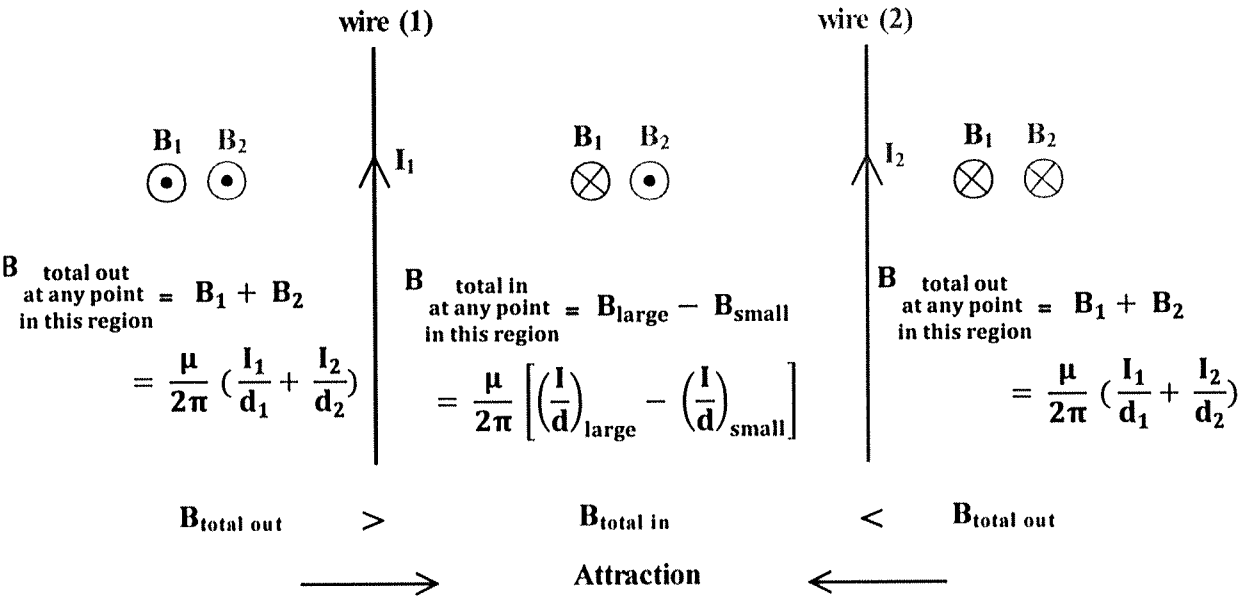

5. Resultant magnetic field due to two parallel wires carrying currents in the <u>opposite</u> direction:

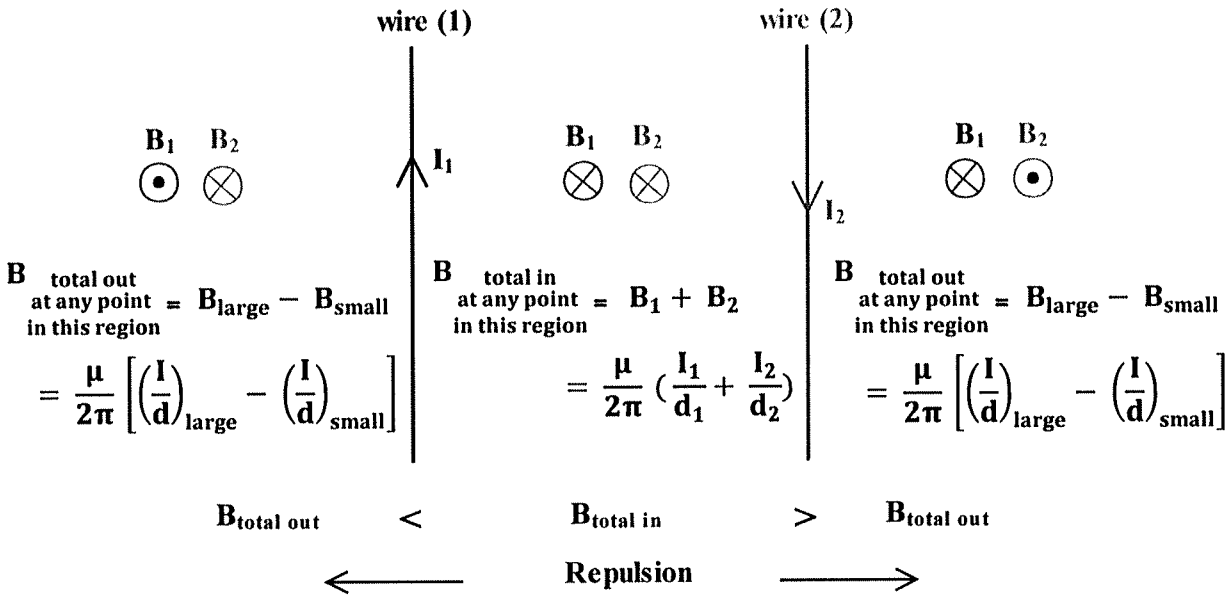

6.

Neutral point:

It is the point at which the total magnetic flux density is equal to zero. ($B_T = 0$)

Neutral point is closer to the smaller current

In case of two parallel wires carrying currents in same direction	In case of two parallel wires carrying currents in opposite direction
The neutral point is located in between the two wires	The neutral point is located outside the two wires closer to the smaller current
assume $I_1 < I_2$ 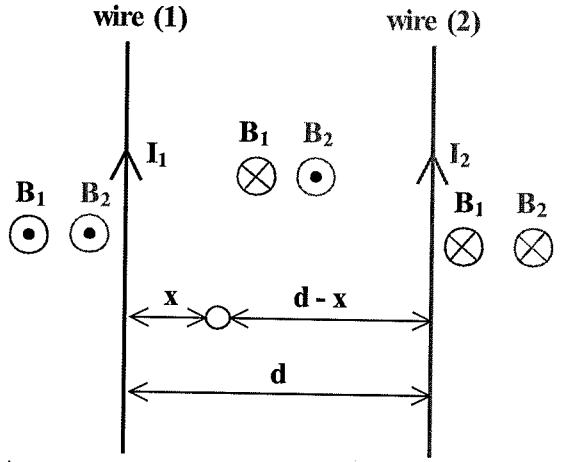	assume $I_1 < I_2$ 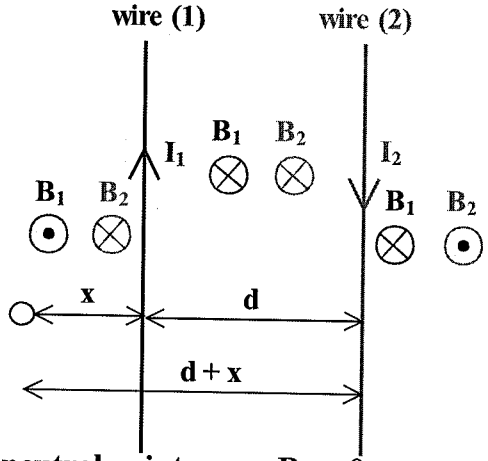
At neutral point: $\because B_T = 0$ $\therefore B_1 = B_2$ $\therefore \frac{\mu}{2\pi}\frac{I_1}{d_1} = \frac{\mu}{2\pi}\frac{I_2}{d_2}$, $\therefore \frac{I_1}{X} = \frac{I_2}{d - X}$	At neutral point: $\because B_T = 0$ $\therefore B_1 = B_2$ $\therefore \frac{\mu}{2\pi}\frac{I_1}{d_1} = \frac{\mu}{2\pi}\frac{I_2}{d_2}$, $\therefore \frac{I_1}{X} = \frac{I_2}{d + X}$
In case of $I_1 = I_2$ $\therefore x = d-x$ $\therefore x = d/2$ $\therefore$ neutral point in the middle point between the two wires	In case of $I_1 = I_2$ $\therefore x \neq d+x$ $\therefore$ In this case NO neutral point exists

7.

At regions (I) & (III):

It is impossible to exist a neutral point because the magnetic flux densities are in the same direction.

At regions (II) & (VI):

So neutral point may exist in region (II) OR in region (VI)

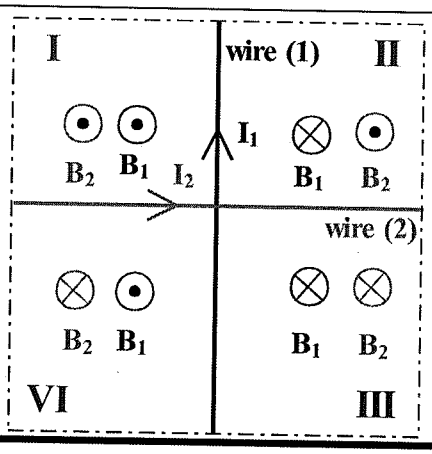

8.

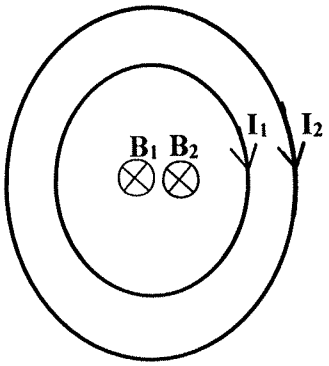

Two concentric coils carrying currents in same direction

$B_{T\ at\ center} = B_1 + B_2$

Direction of B_T in same direction of B_1 and B_2

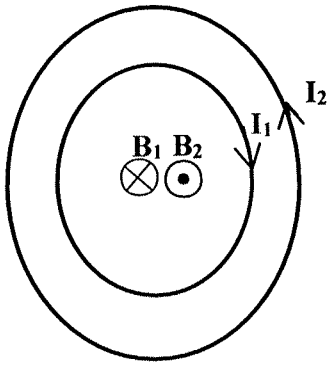

Two concentric coils carrying currents in opposite direction

$B_{T\ at\ center} = B_{\ of\ large\ value} - B_{\ of\ small\ value}$

Direction of B_T in same direction of $B_{\ of\ large\ value}$

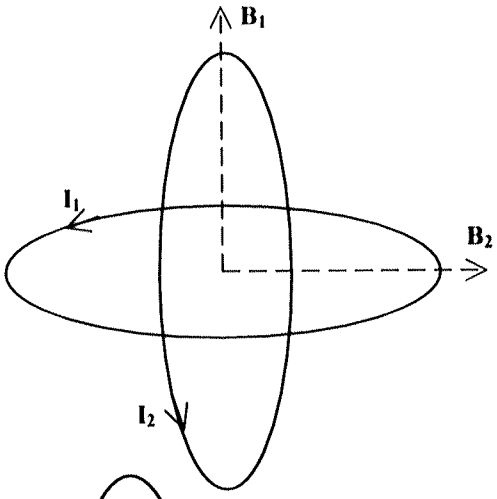

Two perpendicular coils carrying currents

$B_{T\ at\ center} = \sqrt{B_1^{\ 2} + B_2^{\ 2}}$

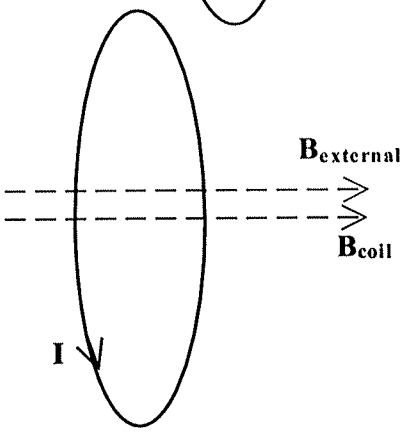

$B_{T\ at\ center} = B_{coil} + B_{external}$

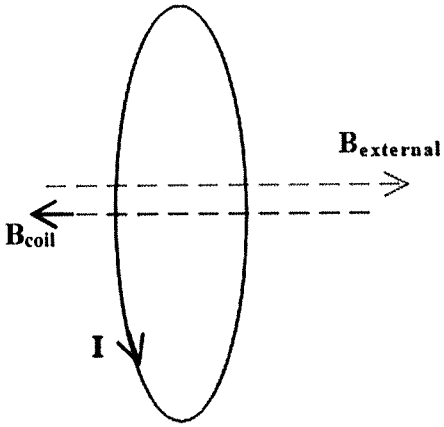

$B_{T\ at\ center} = B_{coil} - B_{external}$

This if $B_{coil} > B_{external}$

9. **The length of wire of circular coil or solenoid $= N \times (2\pi r)$**

Where: N: number of turns of circular coil or solenoid
r: radius of circular coil or solenoid

10.

$$N_{\text{of circular coil}} = \frac{\theta\ (\text{degree})}{360} = \frac{\theta\ (\text{radian})}{2\pi} = \frac{\text{arc}}{2\pi r}$$

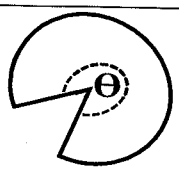

11.

Case (1):
If a wire is wound on a circular coil shape of radius (r_1) and no. of turns (N_1) and carrying current of (I_1)

Wire is uncoiled the again rewound, but same current passes in the coil →

Case (2):
wire is wound on a circular coil shape of new radius (r_2) and new no. of turns (N_2) and carrying same current of (I_1)

Since same wire in the two cases:

$$\therefore\ L_{wire} = N_1 \times 2\pi r_1 = N_2 \times 2\pi r_2 \qquad \therefore\ \frac{N_1}{N_2} = \frac{r_2}{r_1}$$

$$\because\ \frac{B_1}{B_2} = \frac{\frac{\mu}{2}\frac{N_1 I_1}{r_1}}{\frac{\mu}{2}\frac{N_2 I_2}{r_2}} = \frac{N_1\ I_1\ r_2}{N_2\ I_2\ r_1} = \frac{N_1\ r_2}{N_2\ r_1} = \left(\frac{N_1}{N_2}\right)^2 = \left(\frac{r_2}{r_1}\right)^2$$

Where in this case: it is stated that $I_1 = I_2$

12. **In case of wire tangent to a circular coil:**

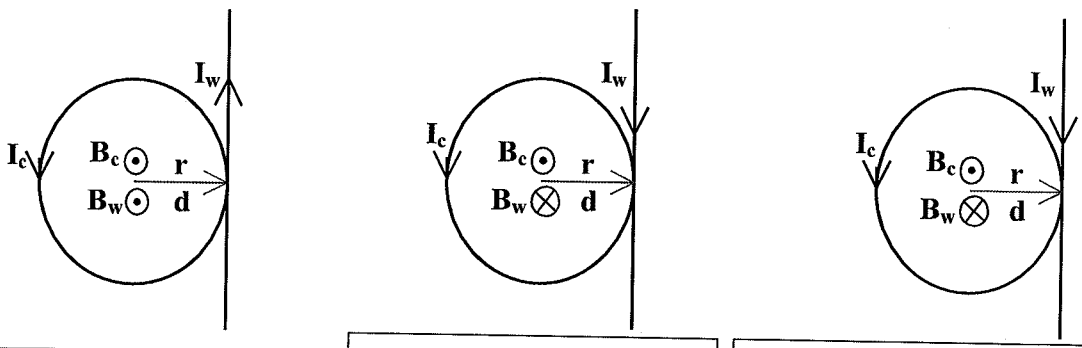

$B_{T\ \text{at center}} = B_{coil} + B_{wire}$ Here: $r = d$ Direction of B_T in same direction of B_c and B_w	$B_{T\ \text{at center}} = B_{coil} - B_{wire}$ Assume: $B_{coil} > B_{wire}$ Direction of B_T in same direction of B of large value here B_c	**In case of neutral point at the center** $B_c = B_w \quad \frac{\mu}{2}\frac{NI_c}{r} = \frac{\mu}{2\pi}\frac{I_w}{d}$ $\therefore\ N I_c = \frac{I_w}{\pi}$

13. **Case (1):** A circular coil of radius (r_c) and no. of turns (N_c) and carrying current of (I_c) → Coil is stretched uniformly such that it forms a solenoid → **Case (2):** A solenoid of length (L_s)

In this problem: by default $N_C = N_s$ & $I_C = I_s$ (ما لم يذكر غير ذلك في المسألة)

In case of the required

$$B_s = B_c \quad \therefore \mu \frac{N_s I_s}{L_s} = \frac{\mu}{2} \frac{N_c I_c}{r_c}$$

$$\therefore L_s = 2r_c$$

$$B_s = \tfrac{1}{2} B_c \quad \therefore \mu \frac{N_s I_s}{L_s} = \frac{1}{2} \frac{\mu}{2} \frac{N_c I_c}{r_c}$$

$$\therefore L_s = 4r_c$$

, So according to the required in the problem, we can follow the previous procedures

14. In case of two solenoids having the same axis carrying currents in the same direction:

$$B_{T \text{ at the common axis}} = B_{\text{solenoid 1}} + B_{\text{solenoid 2}}$$

15. In case of two solenoids having the same axis carrying currents in the opposite direction:

$$B_{T \text{ at the common axis}} = B_{\text{solenoid of large value}} - B_{\text{solenoid of small value}}$$

16. In case of a solenoid of length (L_S) and (N_S) and carry (I_S) wound around its midpoint a circular coil of (N_C , I_C , r_C)

In case of the required is to make $B_{T \text{ at the coil's center}} = \text{Zero}$

Then substitute in $B_s = B_c \quad \therefore \mu \frac{N_s I_s}{L_s} = \frac{\mu}{2} \frac{N_c I_c}{r_c}$

17. If stated in a problem that the solenoid <u>turns are tightly wounded</u> OR <u>turns are tangent to each other</u> , then

$$L_{\text{solenoid}} = N \times \text{Diameter of wire}$$

Solved Examples

1. Calculate the magnetic flux density at a distance of 10cm in air from the center of along wire carrying a current of 10 A. ($\mu_{air} = 4\pi \times 10^{-7}$ Wb/A.m)

$d = 10 \times 10^{-2} = 0.1$ m
$I = 10$ A
$\mu_{air} = 4\pi \times 10^{-7}$ Wb/A.m
B = ???

Solution

$$\because B = \frac{\mu I}{2\pi d} = \frac{4\pi \times 10^{-7}}{2\pi} \times \frac{10}{0.1} = 2 \times 10^{-5} \text{ Tesla}$$

2. Calculate the intensity of the current passing in a straight wire put in the center of a circular ring of diameter 10cm such that it makes the magnetic flux of density at any point on the circumference 2×10^{-5} Tesla. ($\mu_{air} = 4\pi \times 10^{-7}$ Wb/A.m)

$d = r = \frac{10 \times 10^{-2}}{2} = 0.05$ m
$B = 2 \times 10^{-5}\ T$
$\mu_{air} = 4\pi \times 10^{-7}$ Wb/A.m
I = ???

Solution

$$\because B = \frac{\mu I}{2\pi d} \qquad \therefore 2 \times 10^{-5} = \frac{4\pi \times 10^{-7}}{2\pi} \times \frac{I}{0.05} \qquad \therefore I = 5 \text{ A}$$

3. Electric charges move in straight wire at a rate of 3×10^{-4} coulomb per minute, calculate the magnetic flux density at a distance of 20cm from them. ($\mu_{air} = 4\pi \times 10^{-7}$ Wb/A.m)

$Q = 3 \times 10^{-4}$ C
$t = 1 \times 60$ Second
$d = 20 \times 10^{-2} = 0.2$ m
$\mu_{air} = 4\pi \times 10^{-7}$ Wb/A.m
B = ???

Solution

$$\because I = \frac{Q}{t} = \frac{3 \times 10^{-4}}{60} = 5 \times 10^{-6} \text{ A}$$

$$\because B = \frac{\mu I}{2\pi d} = \frac{4\pi \times 10^{-7}}{2\pi} \times \frac{5 \times 10^{-6}}{0.2} = 5 \times 10^{-12} \text{ Tesla}$$

4. A battery of e.m.f = 8V, internal resistance = 1Ω is connected to a wire of length equals 10 cm, radius = 3 mm and resistivity of its material equals 4.5×10^{-6} Ω.m. Find the magnetic flux density at a point at a distance 20cm from the center of wire ($\mu_{air} = 4\pi \times 10^{-7}$ Wb/A.m)

$V_B = 8\ V$, $r = 1\ \Omega$
$L = 10 \times 10^{-2} = 0.1\ m$
$r = 3 \times 10^{-3} = 0.003\ m$ B = ???
$\rho = 4.5 \times 10^{-6}\ \Omega.m$
$d = 20 \times 10^{-2} = 0.2\ m$
$\mu_{air} = 4\pi \times 10^{-7}\ Wb/A.m$

Solution

$$\because R = \rho_e \frac{L}{A} = \frac{4.5 \times 10^{-6} \times 0.1}{\pi \times (0.003)^2} = 0.0159\ \Omega$$

$$\because I = \frac{V_B}{R + r} = \frac{8}{0.0159 + 1} = 7.875\ A$$

$$\therefore B = \frac{\mu\ I}{2\pi d} = \frac{4\pi \times 10^{-7}}{2\pi} \times \frac{7.875}{0.2} = 7.875 \times 10^{-6}\ Tesla$$

---

5. Two fixed wires 10cm apart. A current of 20 ampere passes in each of them. Find the magnetic flux density at the mid-point between the two wires if the currents are:
   a. In the same direction.
   b. In opposite direction. ($\mu_{air} = 4\pi \times 10^{-7}\ Wb/A.m$)

d (distance between 2 wires) = $10 \times 10^{-2} = 0.1\ m$
$I_1 = I_2 = 20\ A$ B_{Total} at mid point = ???
$\mu_{air} = 4\pi \times 10^{-7}\ Wb/A.m$

Solution

$$\therefore B_1 = \frac{\mu\ I_1}{2\pi d} = \frac{4\pi \times 10^{-7}}{2\pi} \times \frac{20}{0.05} = 8 \times 10^{-5}\ Tesla \qquad \therefore B_2 = B_1 = 8 \times 10^{-5}\ T$$

In the same direction:

$\therefore B_T = B_1 - B_2 = Zero$

In the opposite direction:

$\therefore B_T = B_1 + B_2 = 8 \times 10^{-5} + 8 \times 10^{-5} = 16 \times 10^{-5}\ Tesla$

---

6. A straight wire in which a current of intensity 8A passes and beside it and at a distance of 16cm from it an electron beam moves in the same direction of the current in the wire and at a rate of 10^{20} electrons per second, calculate the magnetic flux density at mid-point between them. ($\mu_{air} = 4\pi \times 10^{-7}\ Wb/A.m$)

$I_1 = 8\ A$
d (distance between 2 wires) = $16 \times 10^{-2} = 0.16\ m$
(Opposite direction problem)
$(n/t)_2 = 10^{20}$ electron/sec B_{Total} at mid point = ???
$\mu_{air} = 4\pi \times 10^{-7}\ Wb/A.m$

Solution

$\because I_2 = \frac{n \times e}{t} = 10^{20} \times 1.6 \times 10^{-19} = 16\ A$

$\therefore B_1 = \frac{\mu}{2\pi}\frac{I_1}{d} = \frac{4\pi \times 10^{-7}}{2\pi} \times \frac{8}{0.08} = 2 \times 10^{-5}$ Tesla

$\therefore B_2 = \frac{\mu}{2\pi}\frac{I_2}{d} = \frac{4\pi \times 10^{-7}}{2\pi} \times \frac{16}{0.08} = 4 \times 10^{-5}$ Tesla

In wire (2) electrons motion in same direction as current (I_1), so (I_2) opposite to (I_1)

$\therefore B_T = B_1 + B_2 = 2 \times 10^{-5} + 4 \times 10^{-5} = 6 \times 10^{-5}$ *Tesla*

7. Two parallel wires, the distance between them is 24cm in the first wire a current of intensity 4A passes, in the second wire a current of intensity 8A passes, in the same direction ($\mu_{air} = 4\pi \times 10^{-7}$ Wb/A.m). calculate :
   a. The magnetic flux density at mid-point between them.
   b. The position of the neutral point.
   c. The magnetic flux density at a point 6cm outside them at the side of the first wire.

d (distance between 2 wires) = $24 \times 10^{-2} = 0.24$ m

$I_1 = 4$ A

$I_2 = 8$ A (same direction)

$\mu_{air} = 4\pi \times 10^{-7}$ Wb/A.m

a. B_{Total} at mid point = ???

b. Position of neutral point

c. B_{Total} = ???

Solution

a. $\therefore B_1 = \frac{\mu}{2\pi}\frac{I_1}{d} = \frac{4\pi \times 10^{-7}}{2\pi} \times \frac{4}{0.12} = 66.67 \times 10^{-7}$ T

$\therefore B_2 = \frac{\mu}{2\pi}\frac{I_2}{d} = \frac{4\pi \times 10^{-7}}{2\pi} \times \frac{8}{0.12} = 133.33 \times 10^{-7}$ T

$\therefore B_T = B_2 - B_1 = 66.67 \times 10^{-7}$ T

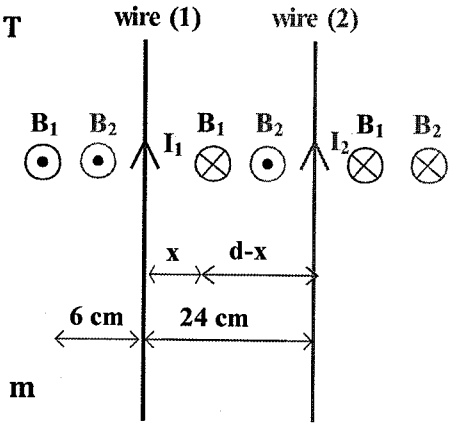

b. At neutral point: $\because B_T = 0$ $\therefore B_1 = B_2$

$\therefore \frac{\mu}{2\pi}\frac{I_1}{d_1} = \frac{\mu}{2\pi}\frac{I_2}{d_2}$, $\therefore \frac{I_1}{X} = \frac{I_2}{d - X}$

$\therefore \frac{4}{X} = \frac{8}{0.24 - X}$ $\therefore 0.96 - 4X = 8X$ $\therefore X = 0.08$ m

$\therefore$ Neutral point between the two wires (0.08 m) away from wire (1) as shown

c. $\therefore B_1 = \frac{\mu}{2\pi}\frac{I_1}{d} = \frac{4\pi \times 10^{-7}}{2\pi} \times \frac{4}{0.06} = 133.33 \times 10^{-7}$ T

$\therefore B_2 = \frac{\mu}{2\pi}\frac{I_2}{d} = \frac{4\pi \times 10^{-7}}{2\pi} \times \frac{8}{(0.06 + 0.24)} = 53.33 \times 10^{-7}$ T

$\therefore B_T = B_1 + B_2 = 186.67 \times 10^{-7}$ T

8. In the previous problem if the two currents were in opposite direction in the two wires, solve the problem.

d (distance between 2 wires) = $24 \times 10^{-2} = 0.24$ m

$I_1 = 4$ A

$I_2 = 8$ A (Opposite direction)

$\mu_{air} = 4\pi \times 10^{-7}$ Wb/A.m

a. B_{Total} at mid point = ???

b. Position of neutral point

c. B_{Total} = ???

Solution

a. $\therefore B_1 = \frac{\mu}{2\pi}\frac{I_1}{d} = \frac{4\pi \times 10^{-7}}{2\pi} \times \frac{4}{0.12} = 66.67 \times 10^{-7}$ T

$\therefore B_2 = \frac{\mu}{2\pi}\frac{I_2}{d} = \frac{4\pi \times 10^{-7}}{2\pi} \times \frac{8}{0.12} = 133.33 \times 10^{-7}$ T

$\therefore B_T = B_2 + B_1 = 2 \times 10^{-5}$ T

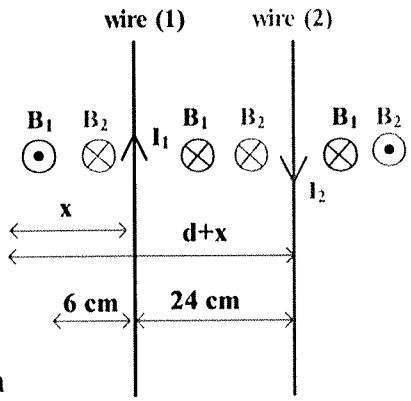

c. At neutral point: (Outside near smaller current)

$\because B_T = 0 \quad \therefore B_1 = B_2$

$\therefore \frac{\mu}{2\pi}\frac{I_1}{d_1} = \frac{\mu}{2\pi}\frac{I_2}{d_2}, \quad \therefore \frac{I_1}{X} = \frac{I_2}{d + X}$

$\therefore \frac{4}{X} = \frac{8}{0.24 + X} \quad \therefore 0.96 + 4X = 8X \quad \therefore X = 0.24$ m

$\therefore$ Neutral point outside the two wires (0.24 m) away from wire (1) as shown

c. $\therefore B_1 = \frac{\mu}{2\pi}\frac{I_1}{d} = \frac{4\pi \times 10^{-7}}{2\pi} \times \frac{4}{0.06} = 133.33 \times 10^{-7}$ T

$\therefore B_2 = \frac{\mu}{2\pi}\frac{I_2}{d} = \frac{4\pi \times 10^{-7}}{2\pi} \times \frac{8}{(0.06 + 0.24)} = 53.33 \times 10^{-7}$ T

$\therefore B_T = B_1 - B_2 = 80 \times 10^{-7}$ T

9. In the opposite figure

Find magnitude and direction of magnetic flux density at point X & Y.

($\mu_{air} = 4\pi \times 10^{-7}$ Wb/A.m).

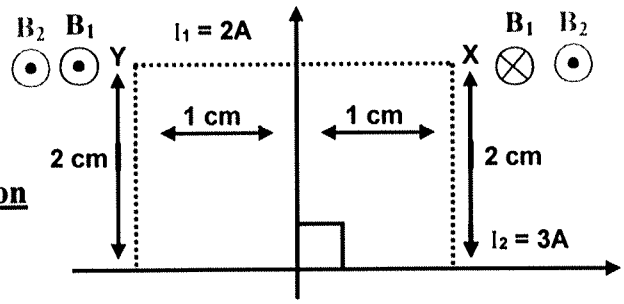

Solution

$\therefore B_1 \text{at } X = \frac{\mu}{2\pi}\frac{I_1}{d} = \frac{4\pi \times 10^{-7}}{2\pi} \times \frac{2}{(0.01)} = 4 \times 10^{-5}$ T $= B_1$ at Y

$\therefore B_2 \text{at } X = \frac{\mu}{2\pi}\frac{I_2}{d} = \frac{4\pi \times 10^{-7}}{2\pi} \times \frac{3}{(0.02)} = 3 \times 10^{-5}$ T $= B_2$ at Y

$\therefore B_{Total}$ at X $= B_1 - B_2 = 1 \times 10^{-5}$ T (into the page) ⊗

$\therefore B_{Total}$ at Y $= B_1 + B_2 = 7 \times 10^{-5}$ T (Out of the page) ⊙

10. Arrange the following figure form that having the highest mag. Flux density at the center (m) to the lower, knowing that the current intensity is the same (I), and all are half circles, then find the value of magnetic flux density (B) at the center for each figure in terms of μ , I, r

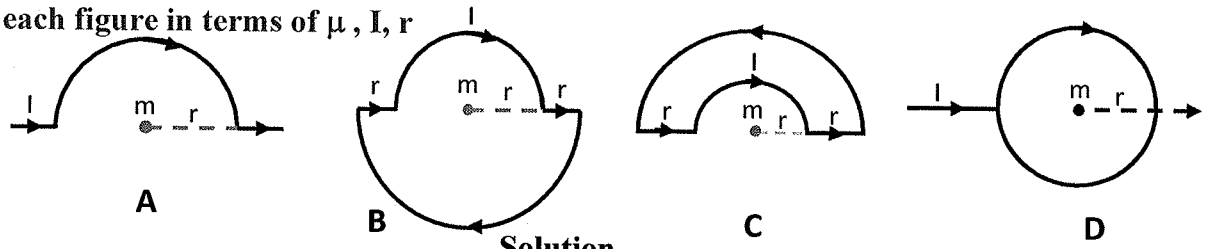

Solution

A: $B = \frac{\mu NI}{2\,r} = \frac{\mu \frac{1}{2} \times I}{2\,r} = \frac{\mu\, I}{4\,r}$

B: $B_1 = \frac{\mu NI}{2\,r} = \frac{\mu\, I}{4\,r}$, $B_2 = \frac{\mu \frac{1}{2} \times I}{2\,(2r)} = \frac{\mu\, I}{8\,r}$ $\therefore B = B_1 + B_2 = \frac{\mu\, I}{4\,r} + \frac{\mu\, I}{8\,r} = \frac{3\,\mu\, I}{8\,r}$

C: $B_1 = \frac{\mu NI}{2\,r} = \frac{\mu\, I}{4\,r}$, $B_2 = \frac{\mu \frac{1}{2} \times I}{2\,(2r)} = \frac{\mu\, I}{8\,r}$ $\therefore B = B_1 - B_2 = \frac{\mu\, I}{4\,r} - \frac{\mu\, I}{8\,r} = \frac{\mu\, I}{8\,r}$

D: $B_1 = \frac{\mu NI}{2\,r} = \frac{\mu \frac{1}{2} \times \left(\frac{1}{2} I\right)}{2\,r}$, $B_2 = \frac{\mu NI}{2\,r} = \frac{\mu \frac{1}{2} \times \left(\frac{1}{2} I\right)}{2\,r}$ $\therefore B = B_1 - B_2 = Zero$

B_1 and B_2 equal in magnutude and opposite in direction

Then the arrange from highest: B > A > C > D

11. Determine the magnetic flux density at the center of a circular loop of radius 11cm carrying a current 1.4 amp. if the wire consists of a coil having 20 turns and ($\mu_{air} = 4\pi \times 10^{-7}$ Wb/A.m).

$r = 11 \times 10^{-2} = 0.11$ m

I = 1.4 A

N = 20

$\mu_{air} = 4\pi \times 10^{-7}$ Wb/A.m

B = ???

Solution

$\because B = \frac{\mu N I}{2\,r} = \frac{4\pi \times 10^{-7}}{2} \times \frac{20 \times 1.4}{0.11} = 16 \times 10^{-5}$ Tesla

12. A circular coil, its number of turns is 700 turns, an electric current passes in it which creates a magnetic flux density 2 x 10^{-2} Tesla at its center, if the diameter of the coil is 44cm, calculate the intensity of the electric current in the coil if ($\mu_{air} = 4\pi \times 10^{-7}$ Wb/A.m).

N = 700

$B = 2 \times 10^{-2}$ T

$r = \frac{44 \times 10^{-2}}{2} = 0.22$ m

$\mu_{air} = 4\pi \times 10^{-7}$ Wb/A.m

I = ???

Solution

$\because B = \frac{\mu N I}{2 r}$ $\therefore 2 \times 10^{-2} = \frac{4\pi \times 10^{-7}}{2} \times \frac{700 \times I}{0.22}$ $\therefore I = 10\ A$

13. An electric current passed in curved wire 26.4cm long, in the shape of an arc or a circle of a radius 5.6cm, the magnetic flux density created at the center of this circle was 8.25 x 10^{-6} Tesla, calculate the intensity of the electric current ($\mu_{air} = 4\pi \times 10^{-7}$ Wb/A.m).

$L_{arc} = 26.4 \times 10^{-2}$ m
$r = 5.6 \times 10^{-2}$ m
$B = 8.25 \times 10^{-6}$ T
$\mu_{air} = 4\pi \times 10^{-7}$ Wb/A.m

I = ???

Solution

$\because N = \frac{arc}{2\pi r} = \frac{26.4 \times 10^{-2}}{2 \times \pi \times 5.6 \times 10^{-2}} = 0.75\ turn$

$\because B = \frac{\mu N I}{2 r}$ $\therefore 8.25 \times 10^{-6} = \frac{4\pi \times 10^{-7}}{2} \times \frac{0.75 \times I}{5.6 \times 10^{-2}}$ $\therefore I = 0.98\ A$

14. A wire in the form of an arc of a circle as in the figure, an electric current of intensity 7A passes in it.
Calculate the magnetic flux density at point A.
($\mu_{air} = 4\pi \times 10^{-7}$ Wb/A.m).

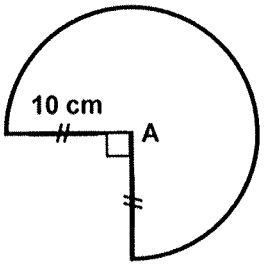

$\Theta = 270$
$r = 10 \times 10^{-2}$ m
$I = 7$ A
$\mu_{air} = 4\pi \times 10^{-7}$ Wb/A.m

B = ???

Solution

$\because \theta = \frac{270}{360} = 0.75\ turn$

$\because B = \frac{\mu N I}{2 r} = \frac{4\pi \times 10^{-7}}{2} \times \frac{0.75 \times 7}{10 \times 10^{-2}} = 3.3 \times 10^{-5}$ Tesla

15. Two concentric wire coils, in the first an electric current of 20A passes, and its number of turns is 350 turns, its radius is 55cm, in the second a current passes of intensity 7amp. the number of its turns is 600 turns, and its radius is 44cm, calculate the common magnetic induction for them if they are in one plane and electric current passing in them are in same direction, then calculate the magnetic flux density at the center ($\mu_{air} = 4\pi \times 10^{-7}$ Wb/A.m). If:

a. One of them is rotated by 180°
b. One of them rotated by 90°

$I_1 = 20$ A , $N_1 = 350$, $r_1 = 55 \times 10^{-2} = 0.55$ m
$I_2 = 7$ A , $N_2 = 600$, $r_2 = 44 \times 10^{-2} = 0.44$ m
(Same direction) $B_T = ???$
$\mu_{air} = 4\pi \times 10^{-7}$ Wb/A.m

Solution

$$\because B_1 = \frac{\mu}{2}\frac{N_1 I_1}{r_1} = \frac{4\pi \times 10^{-7}}{2} \times \frac{350 \times 20}{0.55} \cong 8 \times 10^{-3} \text{ Tesla}$$

$$\because B_2 = \frac{\mu}{2}\frac{N_2 I_2}{r_2} = \frac{4\pi \times 10^{-7}}{2} \times \frac{600 \times 7}{0.44} \cong 6 \times 10^{-3} \text{ Tesla}$$

$\therefore B_T = B_1 + B_2 = 8 \times 10^{-3} + 6 \times 10^{-3} = 14 \times 10^{-3}$ T

a. when rotated by 180° :

$\therefore B_T = B_1 - B_2 = 8 \times 10^{-3} - 6 \times 10^{-3} = 2 \times 10^{-3}$ T

b. when rotated by 90° :

$\therefore B_T = \sqrt{(B_1)^2 + (B_2)^2} = \sqrt{(8 \times 10^{-3})^2 + (6 \times 10^{-3})^2} = 10 \times 10^{-3}$ T

16. A circular coil, the number of its turns is 100 turns, its axis coincides with the earth field of 4 x 10^{-5} Tesla, a current of intensity 3.5 amp. passes in it, it was found that if the coil is over turned, the magnetic flux density at the center becomes double its previous value, calculate the radius of the coil given that the field of the coil is greater than that of the earth ($\mu_{air} = 4\pi \times 10^{-7}$ Wb/A.m).?

$N = 100$
$B_e = 4 \times 10^{-5}$ Tesla
$I = 3.5$ A $r = ???$
When overturned (B_T doubled)
$B_c > B_e$
$\mu_{air} = 4\pi \times 10^{-7}$ Wb/A.m

Solution

$\because B_{T\,2} > B_{T\,1}$

$\therefore B_{T\,1} = B_C - B_e$ $\therefore B_{T\,2} = B_C + B_e$

$\because B_{T\,2} = 2\ B_{T\,1}$ $\therefore B_C + B_e = 2 \times (B_C - B_e)$

$\therefore B_C + B_e = 2\,B_C - 2\,B_e$ $\therefore B_C = 3\,B_e = 3 \times 4 \times 10^{-5} = 12 \times 10^{-5}$ Tesla

$\because B = \frac{\mu}{2}\frac{N\,I}{r}$ $\therefore 12 \times 10^{-5} = \frac{4\pi \times 10^{-7}}{2} \times \frac{100 \times 3.5}{r}$ $\therefore r = 1.83$ m

17. A straight wire was wound in the form of a circular coil of 3 turns and an electric current passes in it, the wire was uncoiled, then again rewound in the form of a circular coil of 10 turns and the same current passes through it, compare between the two magnetic flux densities at the center of two cases?

<u>Case (1):</u> $N_1 = 3$
<u>Case (2):</u> $N_2 = 10$ $B_1 / B_2 = ???$
$I_1 = I_2$

Solution

Since same wire in the two cases:

$\therefore\ L_{wire} = N_1 \times 2\pi r_1 = N_2 \times 2\pi r_2 \qquad \therefore \dfrac{N_1}{N_2} = \dfrac{r_2}{r_1}$

$$\because \frac{B_1}{B_2} = \frac{\frac{\mu}{2}\frac{N_1 I_1}{r_1}}{\frac{\mu}{2}\frac{N_2 I_2}{r_2}} = \frac{N_1\ I_1\ r_2}{N_2\ I_2\ r_1} = \frac{N_1\ r_2}{N_2\ r_1} = \left(\frac{N_1}{N_2}\right)^2 = \left(\frac{3}{10}\right)^2 = \frac{9}{100}$$

18. An insulated long straight wire is in vertical position such that it forms a tangent for an insulated circular coil consisting of one turn, at the center of the coil there is a magnetic needle moving freely in a horizontal plane, calculate the intensity of the electric current which it passes in the wire it does not cause any deflection to the needle when a current of intensity 0.21A passes in the circular coil?

$N = 1$

$I_C = 0.21\ A$ $\qquad I_W = ???$

Solution

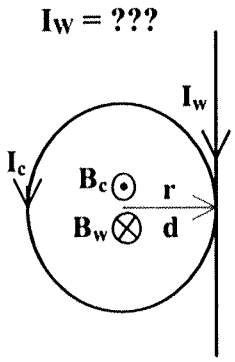

$\because\ B_T$ at center $=$ Zero

$\therefore\ B_c = B_w \qquad \therefore \dfrac{\mu}{2}\dfrac{NI_c}{r} = \dfrac{\mu}{2\pi}\dfrac{I_w}{d}$

$\therefore\ N\,I_c = \dfrac{I_w}{\pi} \qquad \therefore\ 1 \times 0.21 = \dfrac{I_w}{\pi}$

$\therefore\ I_{wire} = \pi \times 0.21 \cong 0.66\ A$

19. In the figure a ring circle its diameter is 2 cm, it connected with a battery its e.m.f is 12 volts and internal resistance 2 Ω, if you know that resistance of ring is 16 Ω. Calculate magnetic flux density at the center of the ring . When the key is:

a. Opened b. Closed ($\mu_{air} = 4\pi \times 10^{-7}\ Wb/A.m$)

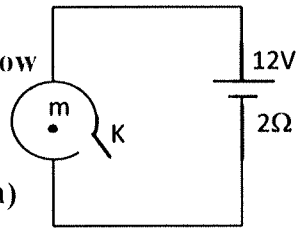

Solution

Case (a): open:

$\because R_{eq} = R_{half\ ring} = \frac{16}{2} = 8\ \Omega$

$\because I = \dfrac{V_B}{R_{eq} + r} = \dfrac{12}{8+2} = 1.2\ A$

$\therefore\ B = \dfrac{\mu}{2}\dfrac{N\,I}{r} = \dfrac{4\pi \times 10^{-7}}{2} \times \dfrac{\frac{1}{2} \times 1.2}{0.01} = 3.77 \times 10^{-5}$ Tesla

Case (b): closed:

The two magnetic flux densities are equal in magnitude and opposite in direction

$\therefore\ B_{total\ at\ center} =$ Zero

20. Two straight wires (A) and (B) are placed (1m) apart from each other. Wire (A) flowing through it a current of intensity 4.5A and that flowing through wire (B) is 1.5A in the same direction.
A circular coil is placed in the same plane of the two wires consists of one turn and radius = (10π cm) and its radius is at a distance of (0.5m) from wire (A) as shown in the figure. What are the magnitude and the direction of the current passing through the circular coil such that the magnetic flux density at its center = zero?

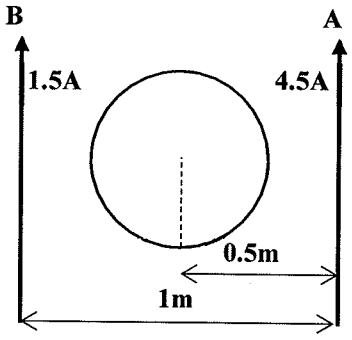

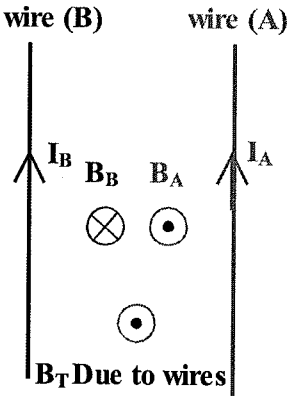

Solution

$\because$ B_A at center $= \frac{\mu}{2\pi}\frac{I_A}{d} = \frac{4\pi \times 10^{-7}}{2\pi} \times \frac{4.5}{0.5} = 1.8 \times 10^{-6}$ T

$\because$ B_B at center $= \frac{\mu}{2\pi}\frac{I_B}{d} = \frac{4\pi \times 10^{-7}}{2\pi} \times \frac{1.5}{0.5} = 0.6 \times 10^{-6}$ T

$\therefore$ B_T due to wires $= B_A - B_B = 1.2 \times 10^{-6}$ T

$\therefore$ For B_T at center = Zero

$\therefore$ B_{Coil} = B_T due to wires = 1.2×10^{-6} T

$\because$ $B_{Coil} = \frac{\mu N I}{2\ r}$ $\quad \therefore 1.2 \times 10^{-6} = \frac{4\pi \times 10^{-7}}{2} \times \frac{1 \times I}{10\pi \times 10^{-2}}$ $\quad \therefore I = 0.6$ A

$\therefore$ B_{Coil} must opposit in direction to B_T due to wires

$\therefore$ B_{Coil} must be into the page $\otimes$

$\therefore$ According to right hand screw or Ampere's Right hand rule:

$\therefore$ I_{coil} is in Clockwise direction

21. Calculate the magnetic flux density at a point on the axis of solenoid 20cm long, and the number of its turns is 700 turns, an electric current of intensity 5A passes in it. ($\mu_{air} = 4\pi \times 10^{-7}$ Wb/A.m).

L = 20×10^{-2} = 0.2 m

N = 700

I = 5 A

$\mu_{air} = 4\pi \times 10^{-7}$ Wb/A.m

B = ???

Solution

$\because$ $B = \mu\frac{N I}{L} = \frac{4\pi \times 10^{-7} \times 700 \times 5}{0.2} = 2.2 \times 10^{-2}$ Tesla

22. A solenoid is 11cm long, the number of its turns 350 turns, the magnetic flux density at a point in its axis is 1.5 x 10^{-3} Tesla, calculate the intensity of electric current passing in it ($\mu_{air} = 4\pi \times 10^{-7}$ Wb/A.m).

$L = 11 \times 10^{-2} = 0.11$ m
$N = 350$
$B = 1.5 \times 10^{-3}$ T
$\mu_{air} = 4\pi \times 10^{-7}$ Wb/A.m

I = ???

Solution

$\because B = \mu \frac{N I}{L}$ $\quad \therefore 1.5 \times 10^{-3} = \frac{4\pi \times 10^{-7} \times 350 \times I}{0.11}$ $\quad \therefore I = 0.375$ A

23. A wire is 88m long, it was wound around an iron rod 10cm long and its diameter 7cm, its permeability is 0.003 wb/amp.m., what it the intensity of electric current passing in the wire such that the magnetic flux density at the axis becomes 5×10^{-3} Tesla?

$L_{wire} = 88$ m
$L_{solenoid} = 10 \times 10^{-2} = 0.1$ m
$r_{of\ iron\ core} = 3.5 \times 10^{-2} = 0.035$ m
$\mu_{iron} = 0.003$ Wb/A.m
$B = 5 \times 10^{-3}$ T

I = ???

Solution

$\because N_{solenoid} = \frac{L_{wire}}{2\pi r} = \frac{88}{2\pi \times 0.035} = 400$ turn

$\because B = \mu_{iron} \frac{N I}{L_{solenoid}}$ $\quad \therefore 5 \times 10^{-3} = \frac{0.003 \times 400 \times I}{0.1}$ $\quad \therefore I = 4.2 \times 10^{-4}$ A

24. Two solenoids have a common axis one of them is inside the other the first is 400 turns and the intensity of its current is 5A, the number of turns of the second is 600 turns and the intensity of its current is 4A their common length is 12cm, calculate the magnetic flux density at a point on the common axis its mid-point given that the electric current are in the same direction?

$I_1 = 5$ A , $N_1 = 400$
$I_2 = 4$ A , $N_2 = 600$
$L_1 = L_2 = 12 \times 10^{-2} = 0.12$ m
(Same direction)
$\mu_{air} = 4\pi \times 10^{-7}$ Wb/A.m

B_T = ???

Solution

$\because B_1 = \mu \frac{N_1 I_1}{L_1} = \frac{4\pi \times 10^{-7} \times 400 \times 5}{0.12} \cong 21 \times 10^{-3}$ Tesla

$\because B_2 = \mu \frac{N_2 I_2}{L_2} = \frac{4\pi \times 10^{-7} \times 600 \times 4}{0.12} \cong 25 \times 10^{-3}$ Tesla

$\therefore B_T = B_1 + B_2 = 21 \times 10^{-3} + 25 \times 10^{-3} = 46 \times 10^{-3}$ T

25. A current of intensity 0.5A passes in a solenoid which consists of 20 turns in each 1cm, another wire was wound around its mid-point to make one circular coil turn only of radius is 1cm, what will be the intensity of the electric current passing in this turn such that its magnetic flux at its center cancels the flux of solenoid, explain what happens at the same point if the direction of the current in this turn is reversed?

$I_S = 0.5$ A

$n_S = \frac{N}{L} = \frac{20}{1 \times 10^{-2}} = 2000$ turn/m

$N_C = 1$ $\qquad I_C = ???$

$r = 1 \times 10^{-2} = 0.01$ m

$B_C = B_S$

Solution

$\because B_T$ at center $= 0$ $\qquad \therefore B_s = B_C$

$\therefore \mu n_S I_S = \frac{\mu}{2}\frac{N_c I_c}{r_c}$

$\therefore I_C = \frac{n_S I_S \times 2 r_c}{N_c} = \frac{2000 \times 0.5 \times 2 \times 0.01}{1} = 20$ A

If the curent directio is reversed: $\therefore B_T = B_C + B_S = 2B_C = 2B_S$

$\therefore B_T = 2 \times \mu n_S I_S = 2 \times 4\pi \times 10^{-7} \times 2000 \times 0.5 = 2.5 \times 10^{-3}$ Tesla

OR: $\therefore B_T = 2 \times \frac{\mu}{2}\frac{N_c I_c}{r_c} = 2 \times \frac{4\pi \times 10^{-7} \times 1 \times 20}{2 \times 0.01} = 2.5 \times 10^{-3}$ Tesla

26. A circular coil of diameter 12cm carries an electric current which generates a magnetic field at its center, if the coil is stretched uniformly in the direction of its axis, such that it forms a solenoid and the same current flows through it, calculate the length of the solenoid which makes the magnetic flux density at a point inside it along its axis = ½ of that at the center of the circular coil.

$r_C = 6 \times 10^{-2} = 0.06$ m

$I_C = I_S$ $\qquad L_S = ???$

$B_S = \frac{1}{2} B_C$

Solution

$\because B_s = {}^1/_2\, B_c \qquad \therefore \mu \frac{N_s I_s}{L_s} = \frac{1}{2}\frac{\mu}{2}\frac{N_c I_c}{r_c} \qquad \because I_C = I_S$ and $N_C = N_S$

$\therefore L_s = 4r_c = 4 \times 0.06 = 0.24$ m

Force due to magnetic field acting on a straight wire carrying current

1. If we place a straight wire carrying current between the poles of a magnet, a force results which acts on the wire (Due to the interaction between the magnetic field of the magnet and the magnetic field due to the current passing in the wire).
2. This force is perpendicular to both the wire (the current) and the magnetic field.
3. The direction of the force is reversed if we reverse the current direction or the magnetic field direction.

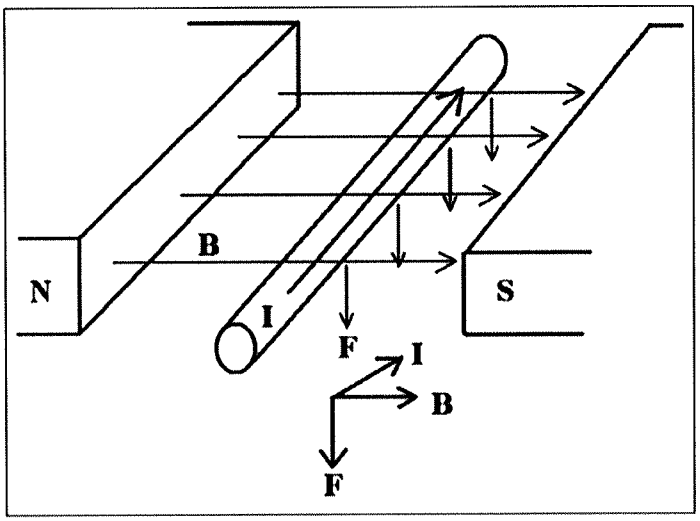

4. In case the wire is allowed to move due to this generated force, the direction of motion is perpendicular to both the electric current and the magnetic field.

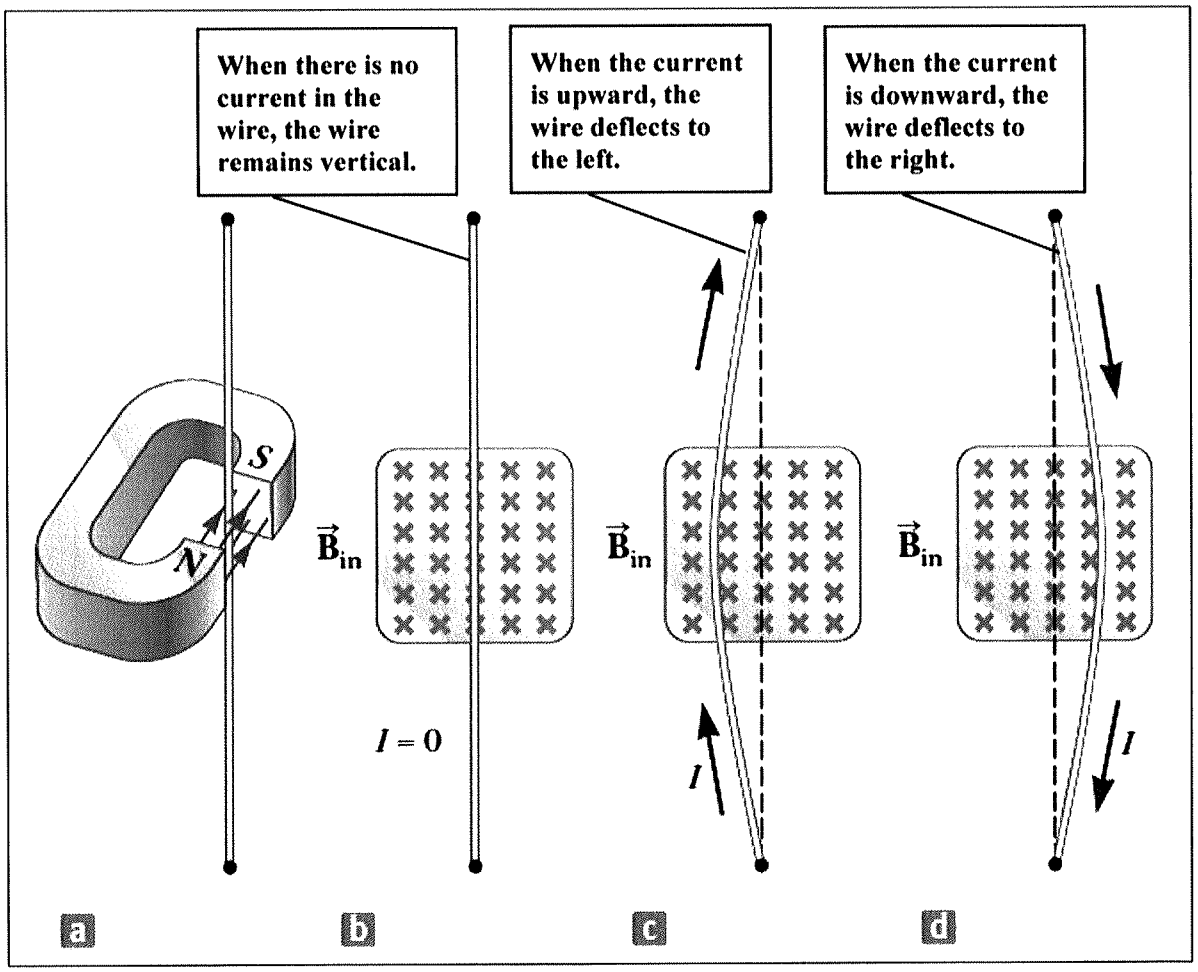

Direction of force acting on a straight wire carrying current placed normal to a uniform external magnetic field:

Fleming's left hand rule:

Use: **Rule used to determine the direction of force acting on a straight wire carrying current placed normal to a uniform external magnetic field.**

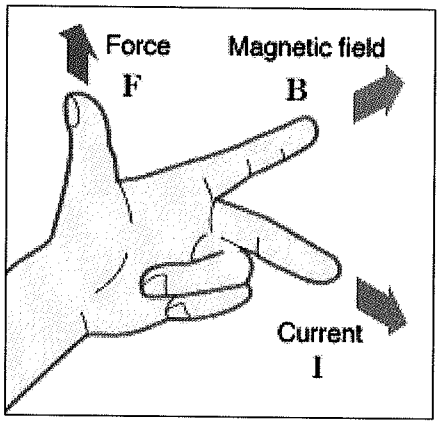

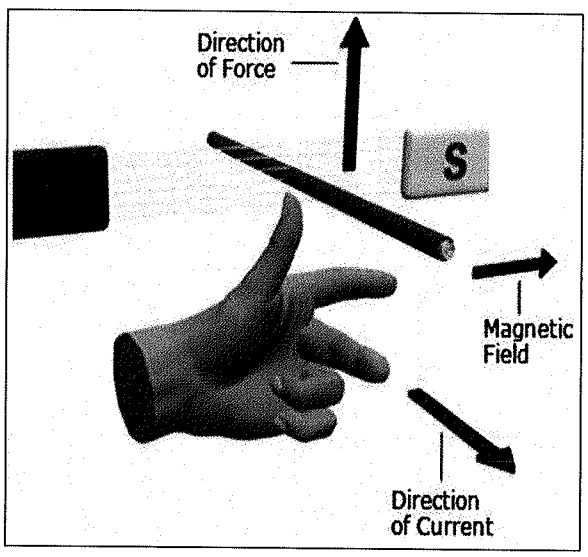

Define:

Form your left hand fingers as follows:

1- The pointer and thumb perpendicular to each other and to the rest of the fingers.

2- Make the pointer points to the direction of the magnetic flux

3- And the rest of the fingers- except the thumb- in the direction of the current.

4- Then, the thumb points to the magnetic force or motion.

Try the following examples:

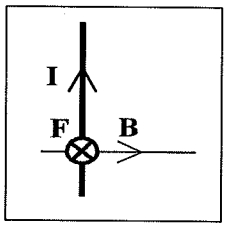

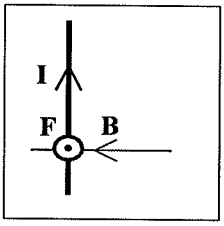

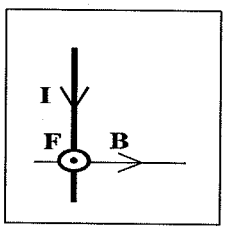

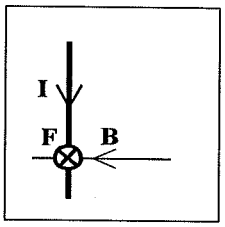

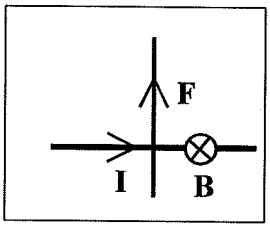

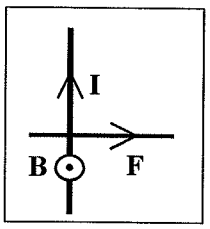

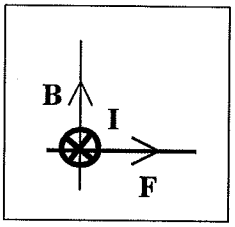

Reason of the force acting on a straight wire carrying current placed normal to a uniform external magnetic field:

(G.R.F: A straight conductor carrying current and placed normal to magnetic field moves (reason of magnetic force)).

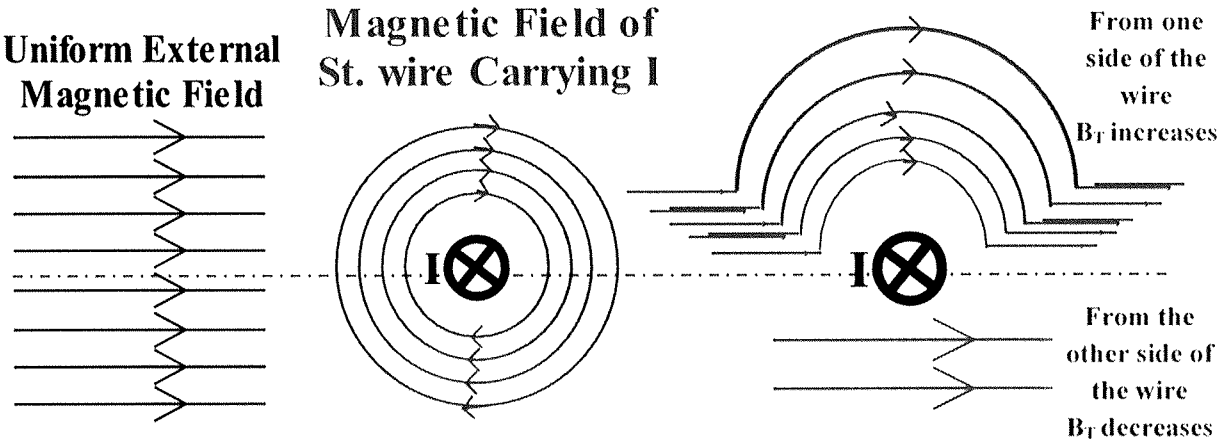

At one side of the wire, the magnetic field of the current is at same direction of the external magnetic field, so B_T increase.

At the other side of the wire, the magnetic field of the current is in opposite direction to the external magnetic field, so B_T decrease.

Due to difference in magnetic flux densities on both sides of the wire. The magnetic flux lines tend to repel each other so exist force on wire acting from the strong magnetic field towards the weak magnetic field.

Proof of magnetic force: (Mathematical Formula)

It is found that the force acting on a wire carrying current flowing perpendicularly to a magnetic field depends on the following factors:

1. **The length of the wire, as the force is directly proportional to length of wire (L) ($F \alpha L$)**
2. **The current intensity, as the force is directly proportional to the current in the wire (I) ($F \alpha I$)**
3. **The magnetic flux density, as the force is directly proportional to the magnetic flux density (B) ($F \alpha B$)**

In general, if a wire of length (L) makes an angle (Θ) with the direction of magnetic field (B), then (B) can be analyzed into two components:

One parallel to the current in the wire = B Cos(Θ)

The other perpendicular to the direction of the current in the wire = B Sin(Θ)

$\therefore$ $F \alpha LIB$ $\therefore$ $F = (\text{constant}) \times LIB$ **it was found that constant = 1**

$$\boxed{F = L\,I\,B\,\sin(\theta)} \rightarrow (5)$$

$$F = L\,I\,B\,\sin(\theta) \rightarrow (5)$$

Where:

F ≡ Force acting on a straight wire carrying current placed normal to a uniform external magnetic field $\left(\text{Newton} = N = \frac{Kg.m}{Sec^2} = \frac{J}{m}\right)$

L ≡ Length of the wire on which the force acting (m)

I ≡ Electric current intensity passing through wire on which the force acting (A)

B ≡ External magnetic flux density $\left(T = \frac{wb}{m^2} = \frac{N}{A.m} = \frac{Kg}{A.Sec^2} = \frac{J}{A.m^2}\right)$

Sin (θ) ≡ θ: is the angle between the wire and the external magnetic field

If the magnetic field not normal to the wire
We always concern with the normal magnetic flux lines to the wire

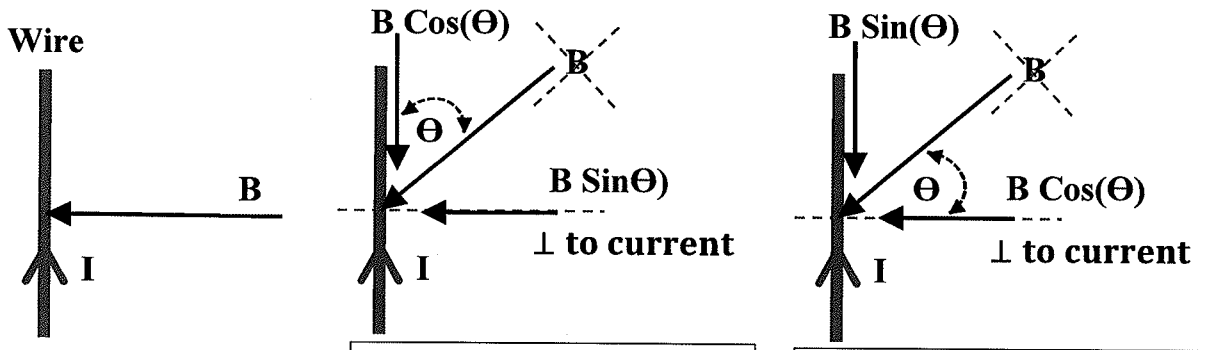

$$F = L\,I\,B$$

$$F = L\,I\,B\,\sin(\theta)$$

θ : is the angle between Magnetic Field & Wire (Current)

$$F = L\,I\,B\,\cos(\theta)$$

θ : is the angle between Magnetic Field & Normal to wire (Current)

We commonly use Sin(θ) in the problems (simpler than Cos(θ) in the problems)

, So

Case(1): If the wire is parallel to the magnetic field
$\theta = \text{Zero}$, $\sin(0) = 0$, $\therefore F = 0$

Case(2): If the wire is normal to the magnetic field
$\theta = 90°$, $\sin(90°) = 1$, $\therefore F = L\,I\,B = \text{max. value}$

Where θ : is the angle between Magnetic Field & Wire (Current)

From the previous relation, we can define Tesla: $B = \frac{F}{L\,I\,\sin(\theta)}$

Magnetic Flux density: (B)

It is the force acting on a straight conductor of length (1m) and carrying current of intensity (1A) when placed normal to magnetic field.

Tesla:

It is the magnetic flux density which produces a magnetic force of (1 Newton) on a straight conductor of length (1m) carrying current of intensity (1A) when placed perpendicular to the field.

The force between two parallel wires each carrying current:

When a current I_1 passes in a wire and a current I_2 passes in another parallel wire, a force results between the two wires.
This force is attractive if the two currents flow in the same direction. The force is repulsive if the two currents flow opposite to each other. We can calculate this force as follows:

In case of two parallel wires carrying currents in same direction	In case of two parallel wires carrying currents in opposite direction
Attraction of the two wires	**Repulsion of the two wires**
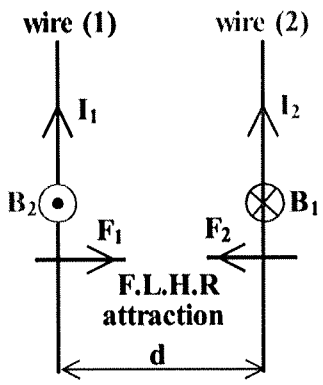	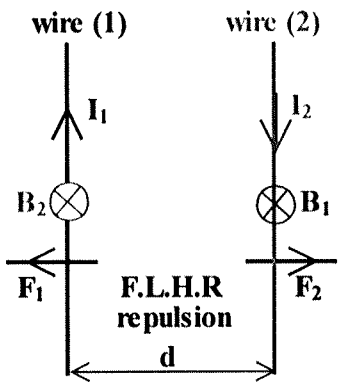

$$F_1 = L_1 I_1 B_2 \qquad F_2 = L_2 I_2 B_1$$

$$F_1 = L_1 I_1 \frac{\mu I_2}{2\pi d} \qquad F_2 = L_2 I_2 \frac{\mu I_1}{2\pi d}$$

$$F_1 = \frac{\mu}{2\pi} I_1 I_2 \frac{L_1}{d} \qquad F_2 = \frac{\mu}{2\pi} I_1 I_2 \frac{L_2}{d}$$

$$If\ L_1 = L_2 = L$$

$$\therefore\ F_1 = F_2 = F$$

Mutual force

Force and torque acting on a rectangular coil carrying current placed in a magnetic field:

Proof:

If we have a rectangular coil (abcd) carrying current (I), whose plane is parallel to the lines of uniform external magnetic field of density (B), then:

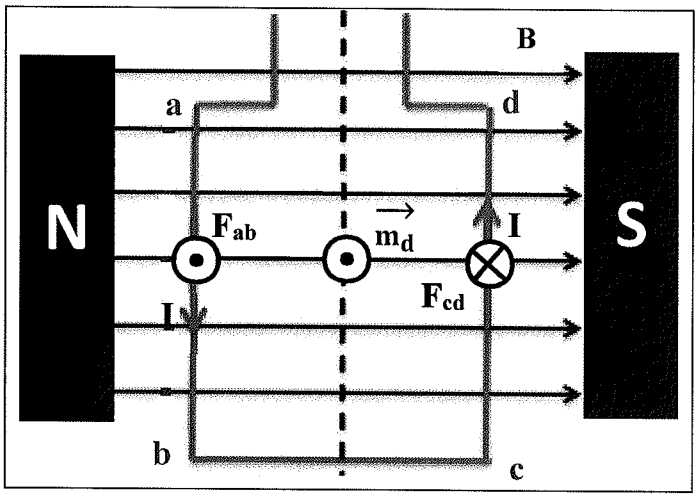

1. Wires (ad) & (bc) are parallel to the magnetic flux lines
   , So force acting on them = Zero
2. Wires (ab) & (cd) are normal to the magnetic flux lines
   , So they are acted by two forces:
   - Equal in magnitude
     $F_{ab} = F_{cd} = B\,I\,L_{cd}$, $(L_{ab} = L_{cd})$
   - Opposite in direction according to Fleming's left hand rule
   - Parallel and separated by a normal distance = L_{ad} OR L_{bc}

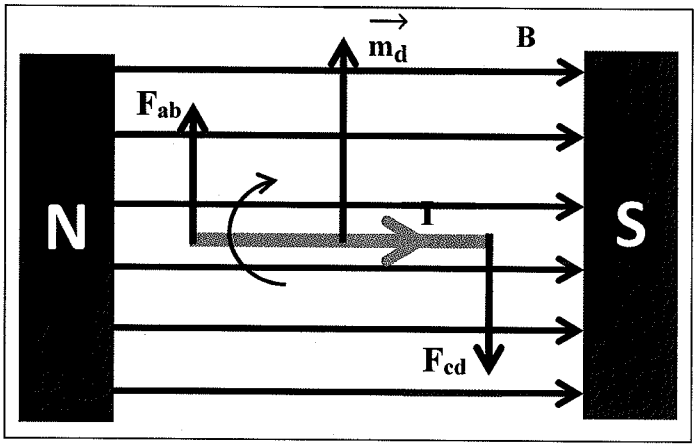

3. , So the coil is affected by a torque which will cause the coil to rotate around its axis.
4. The magnitude of the torque (couple) is equal to the magnitude of the force times the perpendicular distance between the two equal forces.

$\therefore\ \tau = F \times (\perp d) = B\,I\,L_{cd} \times L_{bc} = B\,I\,A$, $A = L_{cd} \times L_{bc}$

For coil of (N) turns: $\therefore\ \tau = B\,I\,A\,N$

If the coil's plane is inclined on the magnetic flux lines at an angle, then:

$$\boxed{\tau = B\,I\,A\,N\,\mathrm{Sin}(\theta) = B\,|\vec{m_d}|\,\mathrm{Sin}(\theta)} \rightarrow (6)$$

$$\boxed{|\vec{m_d}| = I\,A\,N = \frac{\tau_{max}}{B}} \rightarrow (7)$$

Where:

τ ≡ Torque acting on a rectangular coil carrying current placed in a magnetic field ($N.m = \frac{Kg.m^2}{Sec^2} = T.A.m^2$)

B ≡ External magnetic flux density ($T = \frac{wb}{m^2} = \frac{N}{A.m} = \frac{Kg}{A.Sec^2}$)

I ≡ Electric current intensity passing through the coil (A)

A ≡ Cross section area of the coil (m^2)

N ≡ Number of turns of the coil (turn)

$|\vec{m_d}|$ ≡ Magnetic dipole moment (normal to the coil's plane) ($A.m^2 = \frac{N.m}{T} = \frac{Kg.m^2}{Sec^2.T}$)

Sin (Θ) ≡ Θ: is the angle between the magnetic field and the normal to coil's plane $|\vec{m_d}|$

In the opposite graph:

At point (1):

Θ = 0 , Sin(0) = 0 , τ = Zero

Coil normal to the magnetic field

At point (2):

Θ = 90 , Sin(90) = 1 , τ = max.

Coil parallel to the magnetic field

, so coil rotates

At point (3):

Θ = 180 , Sin(180) = 0 , τ = Zero

Coil normal to the magnetic field again

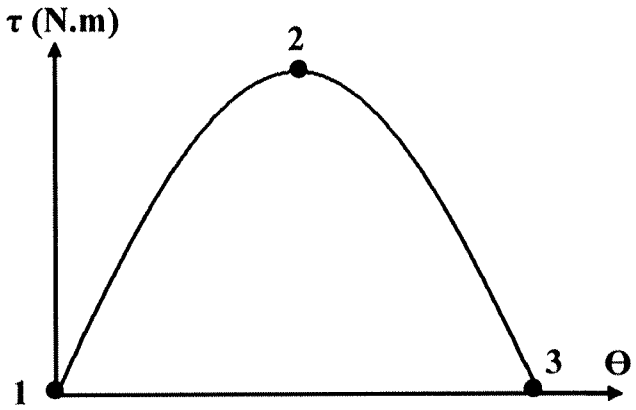

If the magnetic field not Parallel to the coil's plane

We concern with the magnetic flux lines Parallel to the coil's plane

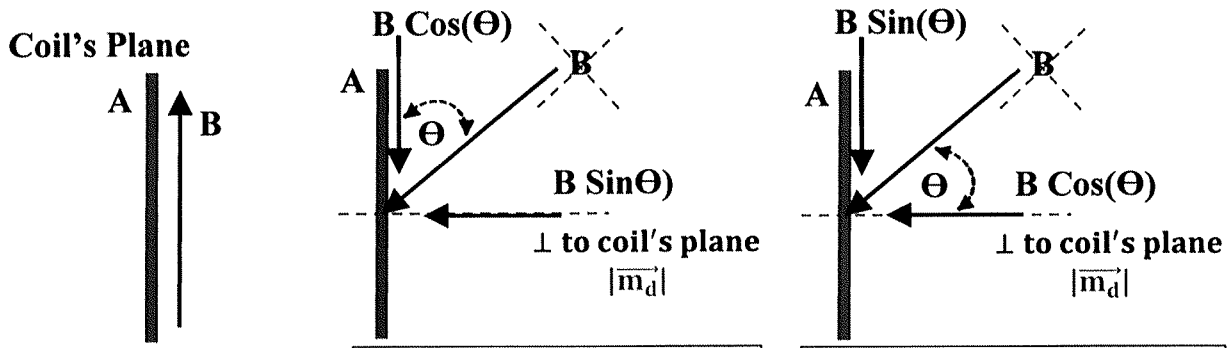

τ = B I A N

τ = BIAN Cos(Θ)
Θ : is the angle between Magnetic Field & Coil's Plane

τ = BIAN Sin(Θ)
Θ : is the angle between Magnetic Field & Normal to Coil's Plane $|\vec{m_d}|$

Using	Coil's Plane is Parallel to the magnetic field	Coil's Plane is Normal to the magnetic field
Sin (Θ) **Θ: is the angle between the magnetic field and the normal to coil's plane $\lvert\overrightarrow{m_d}\rvert$**	$\theta = 90°$, $\text{Sin}(90°) = 1$ $\therefore\ \tau = B\,I\,A\,N\,\text{Sin}(90°)$ $\therefore\ \tau = B\,I\,A\,N = \text{max. Value}$	$\theta = 0°$, $\text{Sin}(0°) = 0$ $\therefore\ \tau = B\,I\,A\,N\,\text{Sin}(0°)$ $\therefore\ \tau = \text{Zero} = \text{min. Value}$
Cos (Θ) **Θ: is the angle between the magnetic field and the coil's plane**	$\theta = 0°$, $\text{Cos}(0°) = 1$ $\therefore\ \tau = B\,I\,A\,N\,\text{Cos}(0°)$ $\therefore\ \tau = B\,I\,A\,N = \text{max. Value}$	$\theta = 90°$, $\text{Cos}(90°) = 0$ $\therefore\ \tau = B\,I\,A\,N\,\text{Cos}(90°)$ $\therefore\ \tau = \text{Zero} = \text{min. Value}$

Magnetic dipole moment: ($\lvert\overrightarrow{m_d}\rvert$)

It is equivalent to the torque acting on a coil carrying current when it is placed parallel to magnetic field of density 1 Tesla.

It is a vector emanating from North Pole of the coil perpendicular to its area.

Its direction determined using right hand screw rule.

Factors affecting on torque acting on a coil carrying current placed in a magnetic field:

1. **Magnetic flux density.** $\tau \propto B$
2. **Electric current intensity passing through the coil.** $\tau \propto I$
3. **Area of the coil.** $\tau \propto A$
4. **Number of turns of the coil.** $\tau \propto N$
5. **Angle between the magnetic field and the normal to coil's plane $\lvert\overrightarrow{m_d}\rvert$** $\tau \propto \text{Sin}(\theta)$

Solved Examples

1. A straight wire carrying an electric current of intensity 8A was put in a magnetic field with an angle of 30° on the direction of the field, it was affected by a force of 20 Newton, if the length of the wire was 50cm, calculate the magnetic flux density.

$I = 8\ A$
$\Theta = 30°$ (bet. wire & M. F) $\qquad B = ???$
$F = 20\ N$
$L = 50 \times 10^{-2} = 0.5\ m$

Solution

$\because\ F = L\,I\,B\,Sin(\Theta)$
$\therefore\ 20 = 0.5 \times 8 \times B \times Sin(30°) \qquad \therefore B = 10$ Tesla

2. A straight wire of length 80cm, it is put vertically in a magnetic field of flux density 4 wb/m², an electric current of intensity 5A passes in it, calculate the force acting on it when:
   a. It is perpendicular to the flux.
   b. It makes an angle 30° with the flux.
   c. It is parallel to the flux.

$L = 80 \times 10^{-2} = 0.8\ m$
$B = 4\ Wb/m^2 \qquad F = ???$
$I = 5\ A$

Solution

$\because\ F = L\,I\,B\,Sin(\Theta)$
a. $\Theta = 90°$ (bet. wire & M. F) $\qquad \therefore F = 0.8 \times 5 \times 4 \times Sin(90°) = 16\ N$
b. $\Theta = 30°$ (bet. wire & M. F) $\qquad \therefore F = 0.8 \times 5 \times 4 \times Sin(30°) = 8\ N$
c. $\Theta = 0°$ (bet. wire & M. F) $\qquad \therefore F = 0.8 \times 5 \times 4 \times Sin(0°) =$ Zero

3. Two parallel wires A and B their length is 3 meters, and the distance between them is 20cm in air, a current of intensity 2A passes in A, and a current of intensity 5 amp. passes in B, in the same direction, ($\mu_{air} = 4\pi \times 10^{-7}$ Wb/A. m) find:
   a. The mutual force acting on them.
   b. The force by which they acting on a third wire (c) in which an electric current of intensity 3A passes, it is midway between them, parallel to them and equal in length
   c. What will be the force acting on the third wire C if the two currents are opposite direction in A and B?

$L_A = L_B = 3\ m$
$d = 20 \times 10^{-2} = 0.2\ m \qquad F = ???$
$\mu_{air} = 4\pi \times 10^{-7}\ Wb/A.m \qquad F_C = ???$
$I_A = 2\ A\ ,\quad I_B = 5\ A$
(Same direction)

Solution

a. $\because L_A = L_B$ $\quad \because F_A = F_B = F_{mutual}$

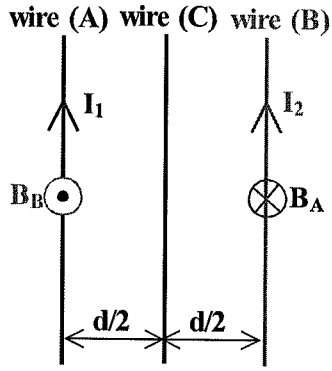

$\therefore F_{mutual} = L_A I_A B_B = L_A I_A \dfrac{\mu I_B}{2\pi d}$

$\therefore F_{mutual} = 3 \times 2 \times \dfrac{4\pi \times 10^{-7}}{2\pi} \times \dfrac{5}{0.2} = 3 \times 10^{-5}$ N

b. $\therefore B_{A\ at\ C} = \dfrac{\mu}{2\pi}\dfrac{I_A}{d} = \dfrac{4\pi \times 10^{-7}}{2\pi} \times \dfrac{2}{0.1} = 0.4 \times 10^{-5}$ T

$\therefore B_{B\ at\ C} = \dfrac{\mu}{2\pi}\dfrac{I_B}{d} = \dfrac{4\pi \times 10^{-7}}{2\pi} \times \dfrac{5}{0.1} = 1 \times 10^{-5}$ T

$\therefore B_{T\ at\ C} = B_{B\ at\ C} - B_{A\ at\ C} = 0.6 \times 10^{-5}$ T

$\therefore F_C = L_C I_C B_{T\ at\ C} = 3 \times 3 \times 0.6 \times 10^{-5} = 5.4 \times 10^{-5}$ N

c. $\therefore B_{T\ at\ C} = B_{B\ at\ C} + B_{A\ at\ C} = 1.4 \times 10^{-5}$ T

$\therefore F_C = L_C I_C B_{T\ at\ C} = 3 \times 3 \times 1.4 \times 10^{-5} = 12.6 \times 10^{-5}$ N

---

4. Three parallel wires, their length is 120cm, in the wire A an electric current of intensity 6A passes, in the middle wire B passes and electric current of intensity 10A and the third wire C passes an electric current of intensity 4A, the currents are in same direction, the wire B is far from each A and C by 40cm, calculate:

a. The force by which the middle wire B is affected and in which direction does it move.

b. The force by which the third wire C is affected, and in which direction does it move. $(\mu_{air} = 4\pi \times 10^{-7}$ Wb/A.m)

$L_A = L_B = L_C = 120 \times 10^{-2} = 1.2$ m

$I_A = 6$ A , $I_B = 10$ A , $I_C = 4$ A

(Same direction)

F_B= ???

F_C= ???

Solution

a. $\therefore B_{A\ at\ B} = \dfrac{\mu}{2\pi}\dfrac{I_A}{d} = \dfrac{4\pi \times 10^{-7}}{2\pi} \times \dfrac{6}{40 \times 10^{-2}} = 0.3 \times 10^{-5}$ T

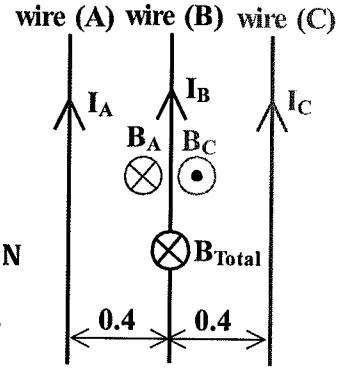

$\therefore B_{C\ at\ B} = \dfrac{\mu}{2\pi}\dfrac{I_C}{d} = \dfrac{4\pi \times 10^{-7}}{2\pi} \times \dfrac{4}{40 \times 10^{-2}} = 0.2 \times 10^{-5}$ T

$\therefore B_{T\ at\ B} = B_{A\ at\ B} - B_{C\ at\ B} = 0.1 \times 10^{-5}$ T

$\therefore F_B = L_B I_B B_{T\ at\ B} = 1.2 \times 10 \times 0.1 \times 10^{-5} = 1.2 \times 10^{-5}$ N

By applying F. L. H. R: wire (B) will move towards wire (A)

Since $B_{A\ at\ B} > B_{C\ at\ B}$

$b. \therefore B_{A\ at\ C} = \frac{\mu I_A}{2\pi d} = \frac{4\pi \times 10^{-7}}{2\pi} \times \frac{6}{80 \times 10^{-2}} = 0.15 \times 10^{-5}$ T

$\therefore B_{B\ at\ C} = \frac{\mu I_B}{2\pi d} = \frac{4\pi \times 10^{-7}}{2\pi} \times \frac{10}{40 \times 10^{-2}} = 0.5 \times 10^{-5}$ T

$\therefore B_{T\ at\ C} = B_{A\ at\ C} + B_{B\ at\ C} = 0.65 \times 10^{-5}$ T

$\therefore F_C = L_C I_C B_{T\ at\ C} = 1.2 \times 4 \times 0.65 \times 10^{-5} = 3.12 \times 10^{-5}$ N

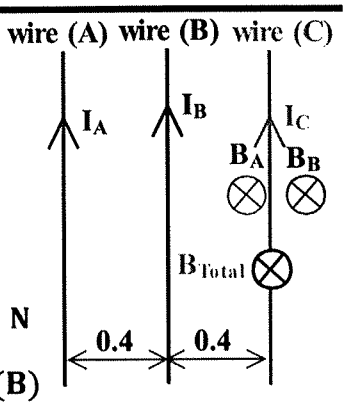

By applying F. L. H. R: wire (C) will move towards wire (A)& (B)

5. Find the force (magnitude and direction) acting on each section of the wire (AB , BC , CD & DE)

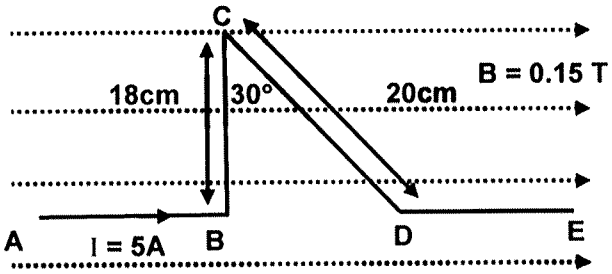

Solution

Section (AB) and (DE):

$\theta = 0°$ (bet. wire & M. F) $\therefore F_{AB} = F_{DE} = L\,I\,B \times \sin(0°) =$ Zero

Section (BC):

$\because F = L\,I\,B \sin(\theta)$

$\theta = 90°$ (bet. wire & M. F) $\therefore F_{BC} = 18 \times 10^{-2} \times 5 \times 0.15 \times \sin(90°) = 0.135$ N

According to F.L.H.R: F_{BC} is into the page

Section (CD):

$\theta = 30°$ (bet. wire & normal to M. F)

$\therefore F_{CD} = 20 \times 10^{-2} \times 5 \times 0.15 \times \sin(60°) = 0.13$ N

According to F.L.H.R: F_{CD} is out of the page

6. An Aluminum wire XY of cross sectional area $0.1 cm^2$ is held horizontally while its terminals are contact to the end of an electric circuit to the ends of an electric circuit as shown in the opposite figure. Find the direction and the density of the magnetic flux that keeps the wire suspended without any external support.

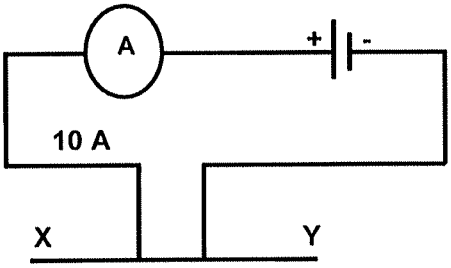

(ρ_{AL}= 2700 kg/m^3, g = 10m/sec^2)

$A_{wire} = 0.1 \times 10^{-4}$ m^2

ρ_{AL}= 2700 kg/m^3

g = 10m/sec^2

I_{wire} = 10 A

B = ???

Solution

For the wire to be suspended, the magnetic force (F_B) must equal to the weight of the wire (F_g) and opposite in direction

$\therefore F_B = F_g$ $\quad \therefore L_{wire} I_{wire} B = m \times g$, where m is mass of wire

$\therefore L_{wire} \times I_{wire} \times B = \rho_{AL} \times V_{ol\ of\ wire} \times g$

$\therefore L_{wire} \times I_{wire} \times B = \rho_{AL} \times A_{wire} \times L_{wire} \times g$

$\therefore 10 \times B = 2700 \times 0.1 \times 10^{-4} \times 10$

$\therefore B = 0.027$ Tesla

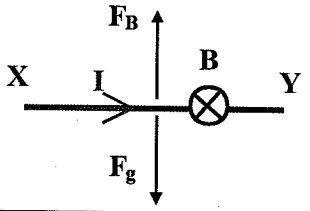

According to F.L.H.R: B must be into the page

7. A rectangular coil of 9 turns carries 0.1A current, the length is 70cm and breadth 10cm, is suspended in one arm of sensitive balance where its lower breadth is perpendicular to magnetic field, it is balanced. When the current is reversed, it is required to add 8.78 gm in the other pan to re-obtain balance, find the density of magnetic field.

Solution

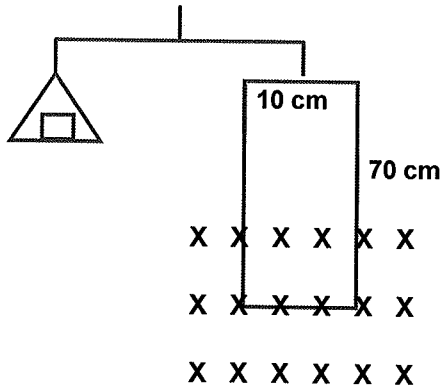

$\because F_{\substack{on\ lower\ arm \\ before\ reversing\ current}} = N \times L I B$

$= 9 \times 0.1 \times 0.1 \times B = 0.09\,B$

$\because F_{\substack{on\ lower\ arm \\ after\ reversing\ current}} = -F_{\substack{on\ lower\ arm \\ befor\ reversing\ current}}$

$\therefore$ Change $= F - (-F) = 2F$

For balance: $\therefore$ Change $(2F) =$ added weight (mg)

$\therefore 2 \times 0.09\,B = 8.78 \times 10^{-3} \times 9.8$

$\therefore B = 0.478$ Tesla

8. The number of turns of a coil is 100 turns, a current of intensity 20 amperes passes in it, it was put in a magnetic field of flux density 0.5 Tesla, if it's cross sectional area is $0.1 m^2$, calculate the moment of couple (torque) acting on it when the angle between the plane of the coil and the field is 30°.

N = 100

I = 20 A $\qquad \tau = ???$

B= 0.5 T

A= 0.1 m^2

$\theta = 30°$ (bet. coil's plane & M. F)

Solution

$\because \tau = B\,I\,A\,N \cos(\theta)$

$\therefore \tau = 0.5 \times 20 \times 0.1 \times 100 \times \cos(30°) = 86.6$ N.m

OR:

$\because \tau = B\,I\,A\,N \sin(\theta)$

$\therefore \tau = 0.5 \times 20 \times 0.1 \times 100 \times \sin(90° - 30°) = 86.6$ N.m

9. A rectangular coil of length 6cm and breadth 4cm, it consists of 200 turns, it was vertically and freely suspended such that the long sides are vertical in a field of flux density 4 Tesla, calculate the magnetic torque acting on the coil in the following cases:
   a. If the plane of the coil is perpendicular to the flux.
   b. If the plane of the coil is parallel to the flux.
   c. If the plane of the coil makes an angle of 60°.
   (given that the intensity of current passing in it 8A)

$A = 6\times4\times10^{-4} = 0.0024 m^2$
$N = 200$
$B = 4\ T$
$I = 8\ A$ $\tau = ???$

Solution

$\because\ \tau = B\,I\,A\,N\,Cos(\theta)$
a. $\theta = 90°$ (bet. coil's plane & M.F)
$\therefore\ \tau = 4\times 8\times 0.0024\times 200\times Cos(90°) = Zero$
b. $\theta = 0°$ (bet. coil's plane & M.F)
$\therefore\ \tau = 4\times 8\times 0.0024\times 200\times Cos(0°) = 15.36\ N.m$
b. $\theta = 60°$ (bet. coil's plane & M.F)
$\therefore\ \tau = 4\times 8\times 0.0024\times 200\times Cos(60°) = 7.68\ N.m$

10. A rectangular coil of length 12cm and breadth 10cm, it consists of 100 turns, it was put such that its plane was parallel to a magnetic field of uniform flux density 2 Tesla, an electric current of intensity 5A passes in it, calculate:
   a. The force by which the two long vertical wire are affected.
   b. The force by which the two long horizontal wire are affected.
   c. The magnetic torque acting on the coil.

Solution

a. $F_{Vertical\ wire} = L\,I\,B\,Sin(\theta) = 0.12\times 5\times 2\times Sin(90°) = 1.2\ N$
b. $F_{Horizontal\ wire} = L\,I\,B\,Sin(\theta) = 0.12\times 5\times 2\times Sin(0°) = Zero$
$\therefore\ \tau = B\,I\,A\,N\,Cos(\theta) = 2\times 5\times(12\times 10\times 10^{-4})\times 100\times Cos(0°) = 12\ N.m$

11. A flat circular coil with 10 loops of wire on it has a diameter of 2cm and carries a current of 0.5A, it's mounted inside a long solenoid that has 200 loops on its 25cm length. The current in the solenoid is 2.4A compute the torque required to hold the coil with its axis perpendicular to that of the solenoid. ($\mu_{air} = 4\pi\times10^{-7}\ Wb/A.m$)

Solution

$$\because\ B_{solenoid} = \mu\frac{N\,I}{L} = \frac{4\pi\times10^{-7}\times200\times2.4}{0.25} = 2.413\times10^{-3}\ Tesla$$

$$\therefore\ \tau_{coil} = B_{solenoid}\,(I\,A\,N)_{coil} = 2.413\times10^{-3}\times0.5\times(\pi\,(0.01)^2)\times10 = 3.8\times10^{-6}\ N.m$$

Applications: Measuring Instruments

The sensitive moving coil galvanometer:

Use (Application):

1. Detect very weak DC currents in circuits.
2. Measure the intensity of these weak currents.
3. Determine the direction of these currents (polarities).

Scientific basic (Idea or theory of action):

Its principle of operation depends on the magnetic torque acting on a coil carrying current moving in a magnetic field. Where $\tau_{max} = B I A N$

Construction:

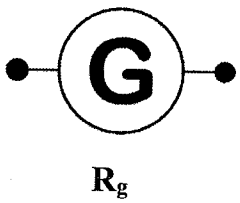

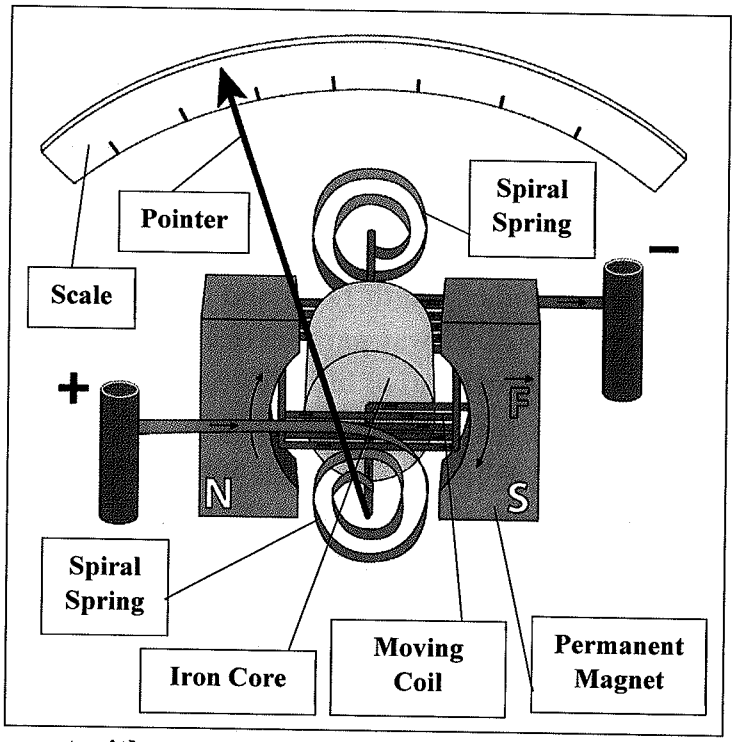

1. A permanent horseshoe magnet with concave poles (the poles of a U-shaped).
2. A coil of insulated thin copper wire wound on a light aluminum frame which rotates around a soft iron cylindrical core (has high permeability, so concentrates Magnetic flux lines) with an axis pivoted on agate bearings (to reduce friction).
3. A pair of spiral control springs wound in opposite direction which:
   a. Serve to in & out current to the coil.
   b. Create a mechanical torque that balances the magnetic torque.
   c. Return back the coil and pointer to zero position when electric current is cut off.
4. A pointer attached to the coil axis and rotates with it on a zero centered uniformly divided scale.

Operation (How does it work?):

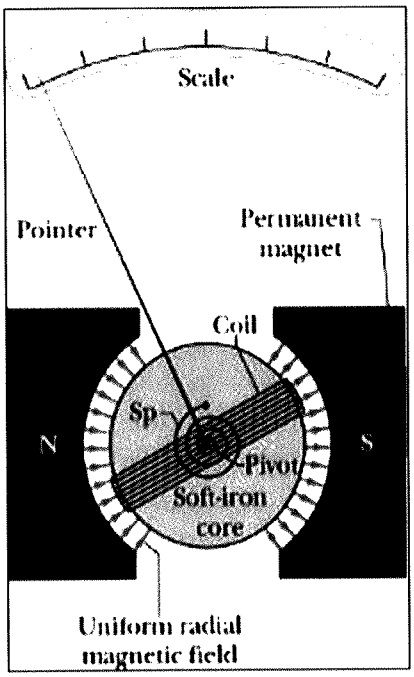

1. **The cylindrical iron core and the concave poles magnet** serve to create a uniform <u>radial</u> <u>constant</u> magnetic field always parallel to the plane of the coil and perpendicular to the vertical sides of the coil regardless the angle of rotation of the coil, so when a current passes in the coil it is acted by a magnetic torque (τ_{max} = **B I A N**) that is always of maximum value and depends only on the value of current intensity regardless of the angle of rotation of the coil.
2. **The coil rotates in clockwise or anticlockwise direction depending on the direction of D.C. current then it stops in a position when the opposite mechanical torque created by spring balances (equal to) the magnetic torque created by the electric current, so the deflection of the pointer $\theta \alpha B I A N$ $\therefore \theta \alpha I$, then the deflection indicates currents intensity.**
3. **If the direction of the current is reversed, the magnetic torque is reversed and pointer rotates in opposite direction. That is why the scale is zero centered to indicate current direction.**

Sensitivity of Galvanometer:

The Galvanometer Sensitivity:

It is the scale deflection per unit current intensity passing through its coil

$$\boxed{\text{Sensitivity} = \frac{\theta}{I}} \rightarrow (8)$$

Where:

θ ≡ Angle of deflection of the pointer of the galvanometer (degree = division)

I ≡ Electric current intensity passing through the galvanometer coil (A or Milliampere or Microampere)

Sensitivity ≡ Its units $\left(\frac{\text{degree}}{A} = \frac{\text{division}}{A} \text{ or } \frac{\text{degree}}{\mu A}\right)$

Factors affecting sensitivity of Galvanometer:

1. Magnetic flux density (B), so we use soft iron core and a strong magnet. Sensitivity α B
2. Area of the coil (A). Sensitivity α A
3. Number of turns of coil (N). Sensitivity α N
4. Can be increased using weak springs.
5. Can be increased by using a gate bearings for the coil axis to reduce friction against rotation of the coil.

$$\text{Sensitivity } \alpha \text{ BAN} \qquad \therefore \text{ Sensitivity} = (Constant) \times \text{BAN}$$

Connection in electric circuits:

The galvanometer is connected in series in the electric circuits to allow the circuit current to pass through the coil so its deflection indicates the circuit current intensity.

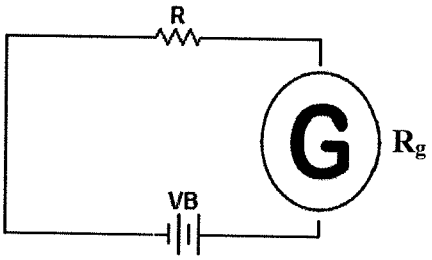

Advantages of galvanometer:

1. Its sensitivity is very high so it can detect and measure very weak D.C currents.
2. The zero centered scale is useful to determine electric current direction.

Disadvantages of galvanometer:

1. Due to high sensitivity it cannot measure high current intensity.
2. It has a coil resistance (R_g), so it introduces errors in current measurement.
3. Its magnet may lose some of its strength and springs may change its elasticity with time and use, so it causes errors, so calibration is necessary to avoid errors of measurements from time to other.
4. It measures D.C. only.

If A.C. current passes in the galvanometer:

In case of low frequency A.C, the pointer will vibrate in both directions quickly.

In case of high frequency A.C, the pointer stops in the middle by inertia.

, So the galvanometer can't measure A.C. currents

Direct current (DC) ammeter:

Use (Application):

Used to measure direct current of high intensity.

Scientific basic (Idea or theory of action):

Its principle of operation depends on the magnetic torque acting on a coil carrying current placed in a magnetic field and by connecting a small resistance (R_s : Shunt) in parallel with the galvanometer coil (R_g) to increase the range of measured current.

Construction:

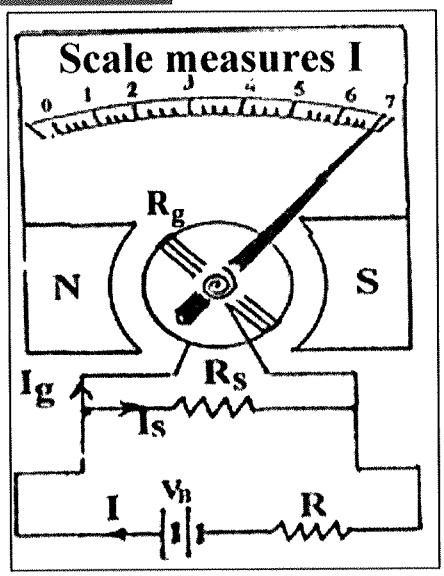

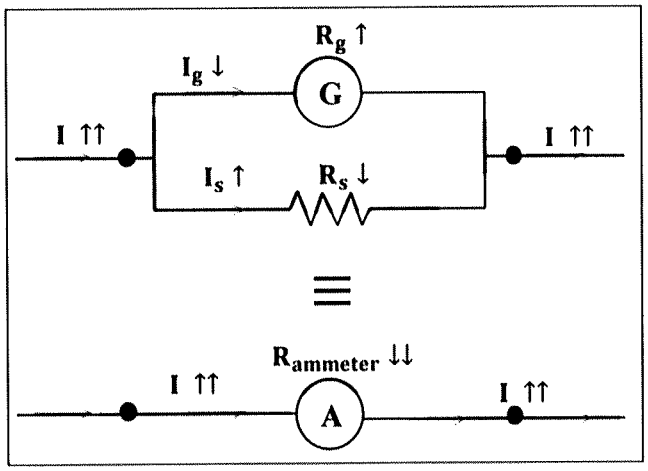

1. **Moving coil galvanometer connected in parallel with its coil a small resistance (R_s) called "Shunt Resistance" or "Current divider".**
2. **Placing the parallel shunt assures that the ammeter as a whole will have a very low resistance ($R_{ammeter}$ decreases)**

Shunt Resistance:

The Shunt Resistance: (R_S)

Definition: It is a small resistance connected in parallel with the galvanometer coil to convert it into a DC ammeter with small resistance to measure high current intensity.

Function (Use):

1. **To increase the range of measured current than that of the galvanometer.**
2. **To decrease the ammeter equivalent resistance in order not to affect the measured current intensity.**
3. **, So decrease error in measurements.**
4. **To protect the galvanometer from damage by passing most of the current through shunt.**

Mathematical Formula (Proof):

$\because R_g // R_s \quad \therefore$

- $I = I_g + I_s \quad \therefore I_s = I - I_g$
- V is constant $\quad \therefore V = V_g = V_s \quad \therefore IR_{ammeter} = I_gR_g = I_sR_s$
- $\therefore R_s = \dfrac{I_gR_g}{I_s}$

$$\boxed{R_s = \frac{I_gR_g}{I - I_g}} \rightarrow (9)$$

Where:

R_s ≡ Shunt resistance (Ω)

I_g ≡ Maximum current intensity passing through the galvanometer coil (A)

R_g ≡ Galvanometer coil resistance (Ω)

I ≡ Maximum current intensity passing through the ammeter after connecting shunt (Full Scale Deflection (FSD)) (A)

I_s ≡ Current intensity passing through the shunt (A)

$$\text{Slope} = \frac{I - I_g}{1/R_s} = R_s(I - I_g) = I_gR_g = V_g$$

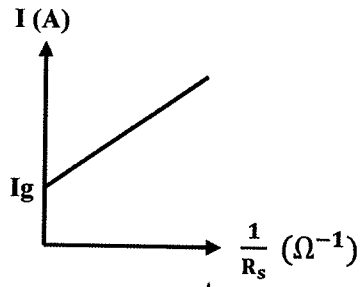

Connection of Ammeter in circuits:

Connected in series in circuits.

Because in series connection the current is constant, so to have the same current intensity in the circuit as in the ammeter, so the ammeter indicates the circuit current intensity.

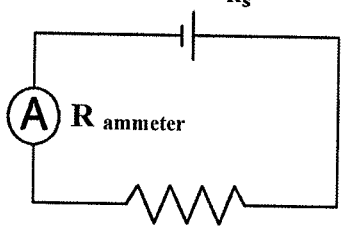

Equivalent Resistance of the ammeter:

$$R_{eq} = R_{total} = R_{ammeter} = \frac{R_g \times R_s}{R_g + R_s} \quad \text{Where} \quad R_{ammeter} < R_s < R_g$$

Sensitivity of Ammeter:

It is the ratio between the current intensity can be measured by the galvanometer before connecting shunt to the current intensity can be measured after connecting shunt.

$$\text{Ammeter sensitivity} = \frac{I_g}{I} = \frac{R_s}{R_g + R_s}$$

As R_s decreases , I (measured current)increases , ammeter sensitivity decreases

Factor affecting its sensitivity: As that of sensitivity of galvanometer + Value of shunt

Direct current (DC) voltmeter:

Use (Application):

Used to measure potential difference across two points in an electric circuit.

Scientific basic (Idea or theory of action):

Its principle of operation depends on the magnetic torque acting on a coil carrying current placed in a magnetic field and by connecting a large resistance (R_m : Multiplier) in series with the galvanometer coil (R_g) to increase the range of measured voltage.

Construction:

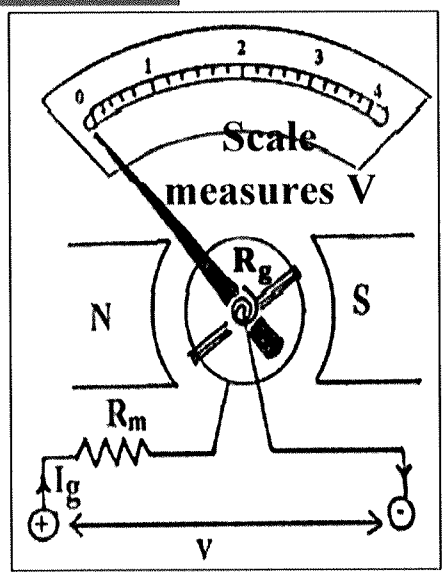

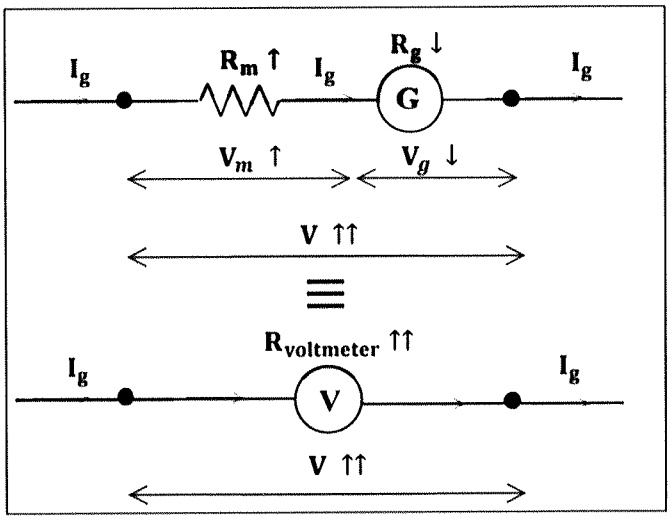

1. **Moving coil galvanometer connected in series with its coil a large resistance (R_m) called "Multiplier Resistance" or "Potential divider".**

Multiplier Resistance:

The Multiplier Resistance: (R_s)

Definition: It is a high resistance connected in series with the galvanometer coil to convert it into a DC voltmeter with high resistance to measure high potential difference

Function (Use):

1. **To increase the range of measured potential difference.**
2. **To increase the voltmeter equivalent resistance in order not to affect the measured potential difference.**
3. **, So decrease error in measurements.**
4. **To protect the galvanometer from damage by decreasing current passing through it.**

Mathematical Formula (Proof):

$\because$ R_g series with R_m $\therefore V = V_g + V_m$ $\therefore V_m = V - V_g$

$\therefore I_g R_m = V - V_g$, Where $V_g = I_g R_g$

$$R_m = \frac{V - V_g}{I_g} \rightarrow (10)$$

Where:

$R_m \equiv$ Multiplier resistance (Ω)

$V \equiv$ Maximum potential difference on the voltmeter (Full Scale Deflection (FSD)) (V)

$V_g \equiv$ Maximum potential difference on the galvanometer (V)

$I_g \equiv$ Maximum current intensity passing through the galvanometer coil (A)

$R_g \equiv$ Galvanometer coil resistance (Ω)

$$\text{Slope} = \frac{V - V_g}{R_m} = I_g$$

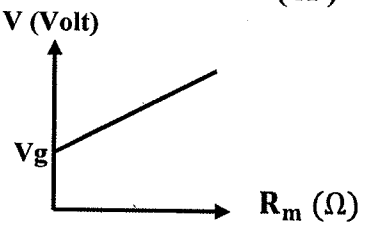

Connection of Voltmeter in circuits:

Connected in parallel in circuits.

Because in parallel connection the potential difference is constant, so to have the measured potential difference in the circuit equals to the potential difference across the voltmeter.

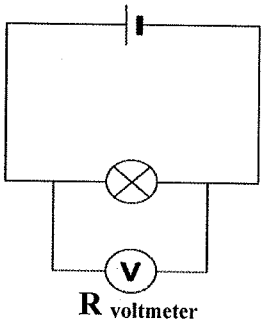

Equivalent Resistance of the ammeter:

$R_{eq} = R_{total} = R_{voltmeter} = R_g + R_m$ Where $R_{voltmeter} > R_m > R_g$

Sensitivity of Voltmeter:

It is the ratio between the potential difference can be measured by the galvanometer before connecting multiplier to the potential difference can be measured after connecting multiplier.

$$\text{Voltmeter sensitivity} = \frac{V_g}{V} = \frac{I_g R_g}{I_g (R_g + R_m)} = \frac{R_g}{(R_g + R_m)}$$

As R_m increases , V (measured P. d)increases , voltmeter sensitivity decreases

Factor affecting its sensitivity:

As that of sensitivity of galvanometer + Value of multiplier

Ohmmeter:

Use (Application):

Used to measure value of unknown resistance directly.

Scientific basic (Idea or theory of action):

Measuring a resistance depends on measuring the current passing through it by an ammeter and the voltage drop across it by a voltmeter. If the current is (I) and the voltage drop is (V), then the resistance (R) from Ohm's law is ($R = \frac{V}{I}$)

If the voltage is fixed and known, we may remove the voltmeter from the circuit and calibrate the galvanometer to give the value of the unknown resistance (R_x) directly. Because as the resistance (R_x) is increased, the current in the circuit decreases.

Construction:

1. **A micro-ammeter which reads 400 μA as a full scale deflection (FSD) (I_g). Its resistance (R_g) is 250 Ω connected in series with:**

a. **A fixed (standard) resistance of 3000 Ω (R_f OR R_s)**
   To decrease the current passing through the circuit to protect the galvanometer from high current.

b. **A variable resistance (Rheostat) whose maximum value is 6565Ω (R_V OR R_{Rh})**
   To adjust full scale deflection current of galvanometer when the test terminals are connected together (short circuited, $R_x = 0$)

c. **A 1.5 V (V_B) battery of negligible internal resistance.**

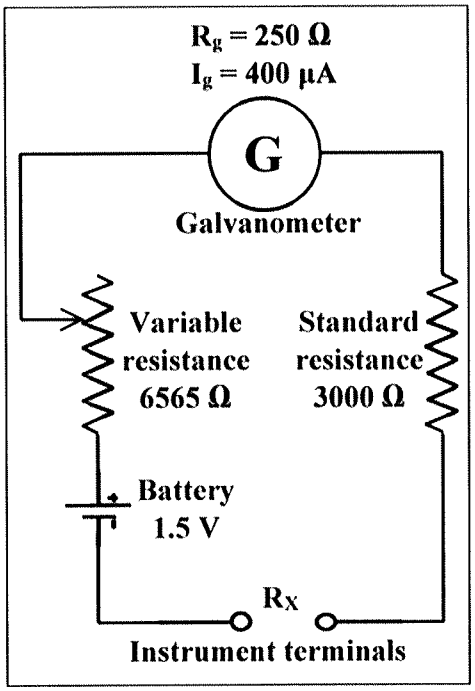

Mathematical Formula (Used Laws):

$$I_{max} = I_g = \frac{V_B}{R_{device\ OR\ ohmmeter}} \rightarrow (11)$$, When $R_x = 0$, the current is max

$$I = \frac{V_B}{R_{device\ OR\ ohmmeter} + R_X} \rightarrow (12)$$

$$R_{device\ OR\ ohmmeter} = R_g + R_{standard} + R_{variable} + r \rightarrow (13)$$

Operation (How to measure unknown resistance?):

1. When we short circuit (S.C) the terminals of the instrument (R_X =0), the variable resistance (R_V) is adjusted until the galvanometer indicates full scale deflection (I_g). Where:

$$R_{device\ OR\ ohmmeter} = \frac{V_B}{I_{max}} = \frac{1.5}{400 \times 10^{-6}} = 3750\ \Omega$$

, So the variable resistance should be adjusted on:

$$R_{variable} = R_{ohmmeter} - R_g - R_{standard} - r = 3750 - 250 - 3000 - 0 = 500\ \Omega$$

2. Now, if the unknown resistance (R_X) is introduced into the circuit, the current flowing will be less than I_g and will be of a value (I) can be calculated from:

$$I = \frac{V_B}{(R_g + R_{standard} + R_{variable} + r) + R_X}$$

3. , So we can calibrate the instrument as follows:

If we connect between terminals (R_X) of value	$R_{circuit\ OR\ total} = R_{device\ OR\ ohmmeter} + R_X$	Current (I) passing in the circuit
0 Ω	$R_{total} = R_{device} = 3750 + 0 = 3750\ \Omega$	400 µA (I_g)
$R_X = R_{device} = 3750\ \Omega$	$R_{total} = 2R_{device} = 3750 + 3750 = 7500\ \Omega$	$I = \frac{1.5}{7500} = 200\ \mu A$ $\left(\frac{1}{2} I_g\right)$
$R_X = 3R_{device} = 11250\ \Omega$	$R_{total} = 4R_{device} = 3750 + 11250 = 15000\ \Omega$	$I = \frac{1.5}{15000} = 100\ \mu A$ $\left(\frac{1}{4} I_g\right)$
$R_X = 7R_{device} = 26250\ \Omega$	$R_{total} = 8R_{device} = 3750 + 26250 = 30000\ \Omega$	$I = \frac{1.5}{30000} = 50\ \mu A$ $\left(\frac{1}{8} I_g\right)$

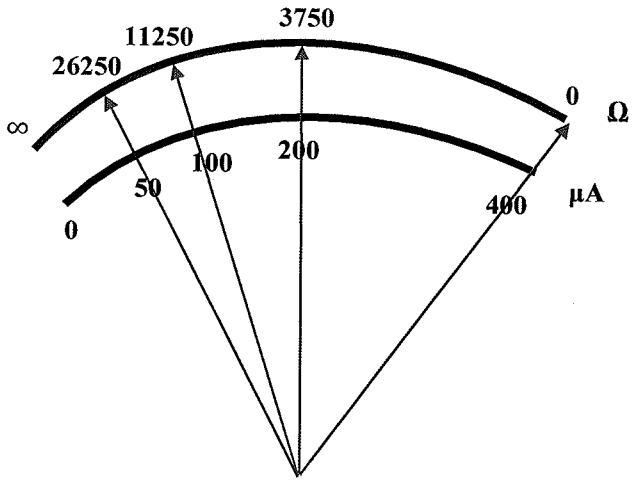

Scale measures R_X

Types of instruments:

Analog instruments:

These instruments use pointers
A combined instrument called analog multi-meter can be switched around to measure voltage, current and resistance.

Digital instruments:

These instruments depend on reading numerals, denoting voltage, current and resistance on a small LCD (liquid crystal display) without the need for a pointer. Such instruments are called digital multi-meters.
They depend on digital electronics (Chapter 8).

All the above instruments measure voltage or current in one direction (DC). Therefore, they are called D.C/multi-meters. But if the current or voltage is A.C, the instrument used is called A.C/multi-meters.

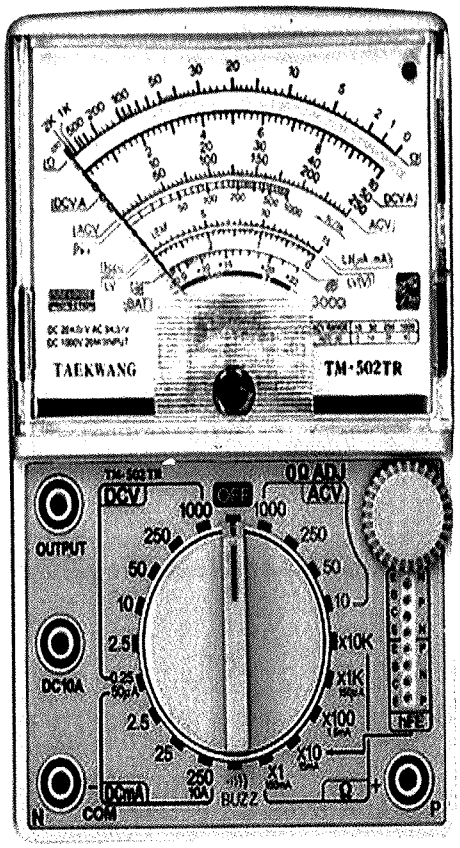

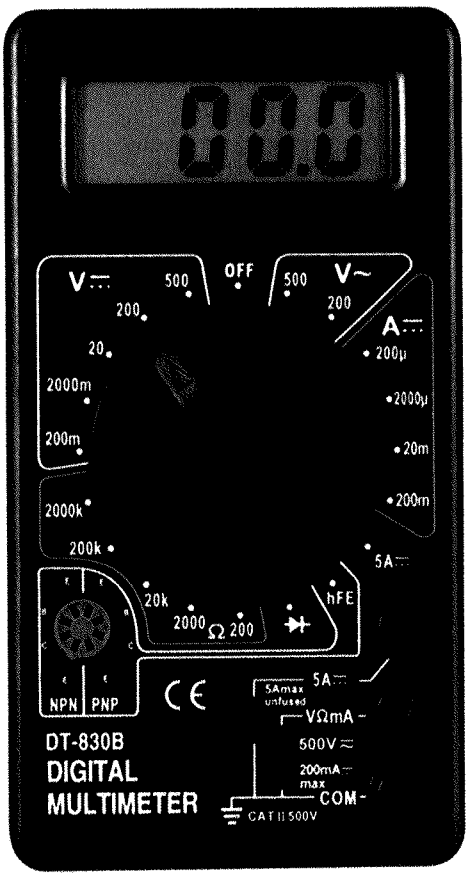

Solved Examples

1. A sensitive galvanometer of sensitivity 2 degrees for each milli-ampere, if a current of intensity 4×10^{-2} A passes in it, calculate the angle of deflection.

Solution

$\because$ Sensitivity $= \frac{\theta}{I} = \frac{2}{1 \times 10^{-3}} = \frac{\theta}{4 \times 10^{-2}}$ $\therefore \theta = 80°$

2. A sensitive galvanometer of sensitivity 2 milli ampere for each scale division, it is graduated into 50 division, calculate the intensity of maximum current it can measure.

Solution

$\because$ Sensitivity $= \frac{\theta \text{ or divisions}}{I} = \frac{1}{2 \times 10^{-3}} = \frac{50}{I_{max}}$ $\therefore I_{max} = 0.1$ A

3. Galvanometer of resistance 54 Ω, gives full scale deflection for a current of 1A, it is desired to use it to measure a current of intensity 10A what is the resistance value of the required shunt and how it will be connected with its coil.

$R_g = 54\ \Omega$
$I_g = 1$ A
$I = 10$ A

$R_S = ???$

Solution

$\because R_s = \frac{I_g R_g}{I - I_g} = \frac{1 \times 54}{10 - 1} = 6\ \Omega$ connected in parallel with galv. coil

4. A sensitive galvanometer, the resistance of its coils is 50 Ω, the maximum current it can read is 1 milli ampere, it is required to change into an ammeter, calculate:
   a. The resistance of the shunt needed to measure current of max. value 0.1amp.
   b. The intensity of the electric current it can measure if the resistance of the shunt becomes 0.1 Ω .

$R_g = 50\ \Omega$
$I_g = 1 \times 10^{-3}$ A

a. $R_S = ???$
b. $I = ???$

Solution

a. $I = 0.1$ A

$\because R_s = \frac{I_g R_g}{I - I_g} = \frac{1 \times 10^{-3} \times 50}{0.1 - 1 \times 10^{-3}} = 0.5\ \Omega$ connected in parallel with galv. coil

b. $R_S = 0.1\ \Omega$

$\because R_s = \frac{I_g R_g}{I - I_g}$ $\therefore 0.1 = \frac{1 \times 10^{-3} \times 50}{I - 1 \times 10^{-3}}$

$\therefore 0.1 I - 0.1 \times 1 \times 10^{-3} = 1 \times 10^{-3} \times 50$

$\therefore 0.1 I = 0.0501$ $\therefore I = 0.501$ A

5. The resistance of a galvanometer is 18 Ω , it is joined to a shunt which permits $^1/_{10}$ of the total current to pass in the galvanometer, calculate the resistance of the shunt.

$R_g = 18\ \Omega$ $\qquad R_S = ???$

$I = 10\ I_g$

Solution

$$\because R_s = \frac{I_g R_g}{I - I_g} = \frac{18 \times I_g}{10\ I_g - I_g} = \frac{18}{9} = 2\ \Omega$$

6. It is required to decreases the sensitivity of an ammeter to $^1/_4$ of its value by using a shunt of resistance 3Ω , calculate the resistance of the shunt need to decrease its sensitivity to 0.1.

$I = 4\ I_g$, $R_S = 3\ \Omega$

$I = 10\ I_g$ $\qquad R_S = ???$

Solution

$$\because R_s = \frac{I_g R_g}{I - I_g} \qquad \therefore 3 = \frac{I_g R_g}{4\ I_g - I_g} = \frac{R_g}{3} \qquad \therefore R_g = 9\ \Omega$$

$$\because R_s = \frac{I_g R_g}{I - I_g} = \frac{9 \times I_g}{10\ I_g - I_g} = \frac{9}{9} = 1\ \Omega$$

7. A resistance of a galvanometer is 90 Ω , it is connected to a shunt of resistance 10.3 Ω , what will be the additional resistance needed to be connected in parallel to allow $^1/_{10}$ of the original current to pass in the galvanometer?

$R_g = 90\ \Omega$

$R_1 = 10.3\ \Omega$, $I = 10\ I_g$ $\qquad R_{S\ additional} = ???$

Solution

$$\because R_s = \frac{I_g R_g}{I - I_g} = \frac{90 \times I_g}{10\ I_g - I_g} = \frac{90}{9} = 10\ \Omega$$

$$\because R_s = R_1\ //\ R_{s\ additional}$$

$$\therefore \frac{1}{R_s} = \frac{1}{R_1} + \frac{1}{R_{s\ additional}} \qquad \therefore \frac{1}{10} = \frac{1}{10.3} + \frac{1}{R_{s\ additional}} \qquad \therefore R_{s\ additional} = 343.33\ \Omega$$

8. The coils resist of a galv is 10 Ω and a current of 0.02 A causes it to deflect full scale. It's desired to convert it to an ammeter reading 10A full scale. The only shunt available has a resist of 0.03 Ω. What resist must be connected in series with the coil?

$R_g = 10\ \Omega$

$I_g = 0.02\ A$ $\qquad R_{Series} = ???$

$I = 10\ A$

$R_S = 0.03\ \Omega$

Solution

$$\because R_s = \frac{I_g R_{g\ total}}{I - I_g} \qquad \therefore 0.03 = \frac{0.02\ R_{g\ total}}{10 - 0.02} = \frac{0.02\ R_{g\ total}}{9.98} \qquad \therefore R_{g\ total} = 14.97\ \Omega$$

$$\because R_{g\ total} = R_g + R_{Series} \qquad \therefore R_{Series} = R_{g\ total} - R_g = 14.97 - 10 = 4.97\ \Omega$$

9. A sensitive galvanometer, the resistance of its coil is 50Ω, the max. current can read is 1 milli ampere, it is required to change it into a voltmeter, calculate:
   a. The resistance of the potential multiplier to let it measure potential difference of 5 volts.
   b. The max. voltage it can measure if it is connected to a potential multiplier 1000 Ω

$R_g = 50\ \Omega$ | a. $R_m = ???$
$I_g = 1 \times 10^{-3}$ A | b. $V = ???$

Solution

a. $V = 5$ Volt

$\because R_m = \frac{V - V_g}{I_g} = \frac{5 - 1 \times 10^{-3} \times 50}{1 \times 10^{-3}} = 4950\ \Omega$ connected in series with galv. coil

b. $R_m = 1000\ \Omega$

$\because R_m = \frac{V - V_g}{I_g}$ $\therefore 1000 = \frac{V - 1 \times 10^{-3} \times 50}{1 \times 10^{-3}}$

$\therefore 1 = V - 1 \times 10^{-3} \times 50$ $\therefore V = 1.05$ Volts

10. A moving coil galvanometer of resistance 40 Ω, it gives full scale deflection by passing 5 milli ampere current in its coil, how can it be modified for measuring:
   a. Max. current of intensity 10A.
   b. A potential difference of max. value 10V.

$R_g = 40\ \Omega$ | a. $R_s = ???$
$I_g = 5 \times 10^{-3}$ A | b. $R_m = ???$

Solution

a. $I = 10$ A

$\because R_s = \frac{I_g R_g}{I - I_g} = \frac{5 \times 10^{-3} \times 40}{10 - 5 \times 10^{-3}} = 0.02\ \Omega$ connected in parallel with galv. coil

b. $V = 10$ Volt

$\because R_m = \frac{V - V_g}{I_g} = \frac{10 - 5 \times 10^{-3} \times 40}{5 \times 10^{-3}} = 1960\ \Omega$ connected in series with galv. coil

11. The resistance of the coil of a sensitive galvanometer is 50Ω , the maximum potential it can measure is 0.05 volts, calculate:
   a. The max. potential difference it measure if it is connected to a multiplier 500Ω .
   b. The max. current intensity it can measure if it is connected with a shunt of 0.01Ω .

$R_g = 50\ \Omega$ | a. $V = ???$
$V_g = 0.05$ Volt | b. $I = ???$

Solution

$\because I_g = \frac{V_g}{R_g} = \frac{0.05}{50} = 0.001\ A$

a. $R_m = 500\ \Omega$

$\because R_m = \frac{V - V_g}{I_g}$ $\therefore 500 = \frac{V - 0.05}{0.001}$ $\therefore V = 0.55$ Volts

b. $R_s = 0.01\ \Omega$

$\because R_s = \frac{I_g R_g}{I - I_g}$ $\therefore 0.01 = \frac{0.05}{I - 0.001}$ $\therefore I = 5\ A$

12. A sensitive galvanometer cannot bear a current more than 10 milli ampere, if its resistance is 19.1Ω , calculate the value of the resistance necessary to let it be suitable:
    a. As an ammeter which measures a current of 1 ampere.
    b. As a voltmeter that measures a potential of 5 volts.

$R_g = 19.1\ \Omega$ a. $R_s = ???$

$I_g = 10 \times 10^{-3}$ A b. $R_m = ???$

Solution

a. $I = 1$ A

$\because R_s = \frac{I_g R_g}{I - I_g} = \frac{10 \times 10^{-3} \times 19.1}{1 - 10 \times 10^{-3}} = 0.193\ \Omega$

b. $V = 5$ Volt

$\because R_m = \frac{V - V_g}{I_g} = \frac{5 - 10 \times 10^{-3} \times 19.1}{10 \times 10^{-3}} = 480.9\ \Omega$

13. The scale of a galvanometer is graduated into 150 division, each 10 division indicate 1 milli ampere, and each 2 division indicates 1 milli volt, when it is used to measure the potential difference, how can we change it into:
    a. An ammeter which measure current up to 6 ampere.
    b. An voltmeter such that each division indicate 0.1 volts.

Solution

$\because$ 10 division $\rightarrow\rightarrow$ 1 mA

$\therefore$ 150 division $\rightarrow\rightarrow$?? mA $= I_g$

$\therefore I_g = \frac{150 \times 1}{10} = 15$ mA

$\because$ 2 division $\rightarrow\rightarrow$ 1 mV

$\therefore$ 150 division $\rightarrow\rightarrow$?? mV $= V_g$

$\therefore V_g = \frac{150 \times 1}{2} = 75$ mV

$\therefore R_g = \frac{V_g}{I_g} = \frac{75 \times 10^{-3}}{15 \times 10^{-3}} = 5\ \Omega$

a. $I = 6\ A$

$\because R_s = \frac{I_g R_g}{I - I_g} = \frac{15 \times 10^{-3} \times 5}{6 - 15 \times 10^{-3}} = 0.0125\ \Omega$ connected in parallel with galv. coil

b. $V = 0.1 \times 150 = 15$ Volt

$\because R_m = \frac{V - V_g}{I_g} = \frac{15 - 15 \times 10^{-3} \times 5}{15 \times 10^{-3}} = 995\ \Omega$ connected in series with galv. coil

14. A galvanometer if it is connected to a shunt of 0.1 Ω it can be used for measuring a maximum current of 5A, and if it is connected to a multiplier of resistance 187 Ω, it measures a potential of 45 volts, calculate its resistance.

$R_s = 0.1\ \Omega$, $I = 5\ A$

$R_m = 187\ \Omega$, $V = 45\ V$ $\qquad R_g = ???$

Solution

$\because R_s = \frac{I_g R_g}{I - I_g} \quad \therefore 0.1 = \frac{I_g R_g}{5 - I_g} \quad \therefore 0.5 - 0.1\, I_g = I_g R_g \rightarrow (1)$

$\because R_m = \frac{V - V_g}{I_g} \quad \therefore 187 = \frac{45 - I_g R_g}{I_g} \quad \therefore 187\, I_g = 45 - I_g R_g \rightarrow (2)$

From (1)in (2): $\therefore 187\, I_g = 45 - (0.5 - 0.1\, I_g)$

$\therefore 187\, I_g = 44.5 + 0.1\, I_g \quad \therefore 186.9\, I_g = 45.5 \quad \therefore I_g = 0.24\ A$

In (1): $\therefore 0.5 - 0.1 \times 0.24 = 0.24 \times R_g \quad \therefore R_g = 2\ \Omega$

15. A galvanometer ($R_g = 20\ \Omega$, $I_g = 1$ milli amp.) is connected in parallel with 5 Ω resistor, then both are connected in series with 5996 Ω resistor, find the maximum potential difference that meter can measure

$R_g = 20\ \Omega$

$I_g = 1 \times 10^{-3}\ A$ $\qquad V = ???$

$R_S = 5\ \Omega$

$R_m = 5996\ \Omega$

Solution

$\because R_g^{\backslash} = \frac{R_g \times R_S}{R_g + R_S} = \frac{20 \times 5}{20 + 5} = 4\ \Omega$

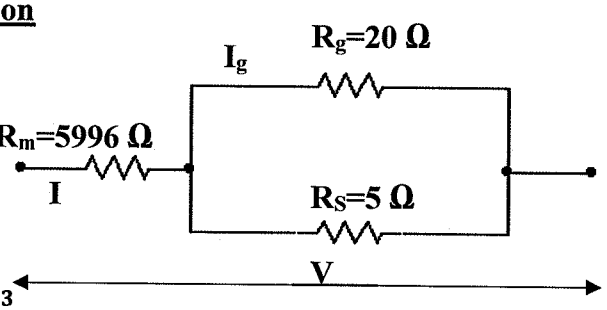

$\because R_s = \frac{I_g R_g}{I - I_g} \quad \therefore 5 = \frac{1 \times 10^{-3} \times 20}{I - 1 \times 10^{-3}}$

$\therefore I = 5 \times 10^{-3}\ A = I_g^{\backslash}$

$\because R_m = \frac{V - V_g^{\backslash}}{I_g^{\backslash}} \quad \therefore 5996 = \frac{V - 4 \times 5 \times 10^{-3}}{5 \times 10^{-3}}$

$\therefore V = 30$ Volts

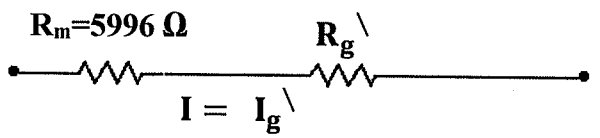

16. A current 2A passes in a resistance 5 Ω , a voltmeter of resistance 2000 Ω is used to measure the p.d across this resistance, find the error in its reading.

Solution

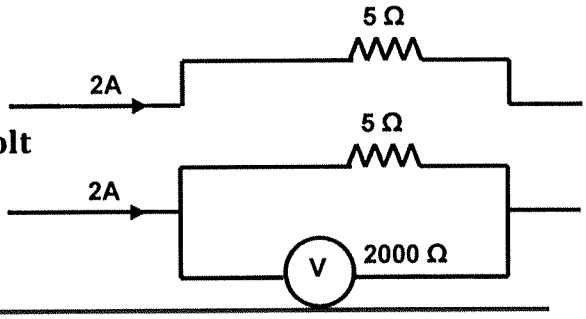

$\because V_{calcuated} = I R = 2 \times 5 = 10$ Volt

$\because V_{reading} = I R_{eq} = 2 \times \frac{5 \times 2000}{5 + 2000} = 9.975$ Volt

$\therefore$ Error $= V_{calcuated} - V_{reading}$

$= 10 - 9.975 = 0.025$ Volt

17. An ammeter and a coil are connected in series to a current source A voltmeter is connected in parallel to the coil. The readings of the voltmeter and ideal ammeter are 200V and 0.5A respectively. Find the resist of the coil when:

a. The resistance of the voltmeter is infinitely great

b. The resistance of the voltmeter is 2000Ω.

Solution

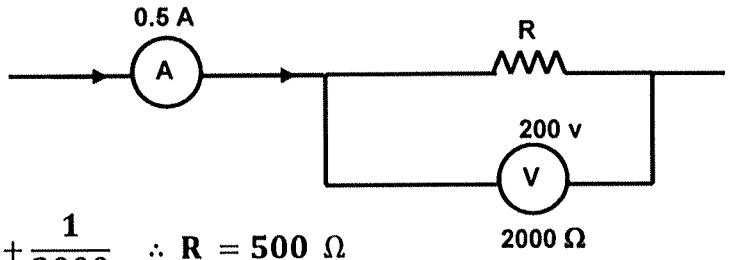

a. $\because R = \frac{V}{I} = \frac{200}{0.5} = 400\ \Omega$

b. $\because R_{eq} = \frac{V}{I} = \frac{200}{0.5} = 400\ \Omega$

$\because R_{eq} = R\ //\ 2000\Omega$

$\therefore \frac{1}{R_{eq}} = \frac{1}{R} + \frac{1}{2000}$ $\quad \therefore \frac{1}{400} = \frac{1}{R} + \frac{1}{2000}$ $\quad \therefore R = 500\ \Omega$

18. An electrical circuit has affixed resistor 6Ω a voltmeter of resistor 30Ω is connected with the two terminals of this resistor and an electric current of 0.2A is passed through the circuit , then the Voltmeter gives a full scale deflection , what is the reading of the voltmeter ? if a resistor of 144Ω was connected in series with the voltmeter in this circuit , keeping the current of the circuit constant what is the maximum potential difference could be measured by the voltmeter in this case .

Solution

Case (1):

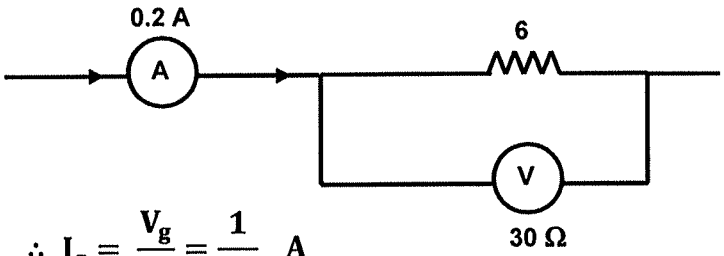

$\because V_{reading} = I R_{eq} = 0.2 \times \frac{6 \times 30}{6 + 30}$

$= 1$ Volt

In this case the reading $= V_g$ $\quad \therefore I_g = \frac{V_g}{R_g} = \frac{1}{30}$ A

Case (2):

$\because V_{reading} = I R_{eq} = 0.2 \times \frac{6 \times (30+144)}{6+(30+144)}$

$= 1.16$ Volt

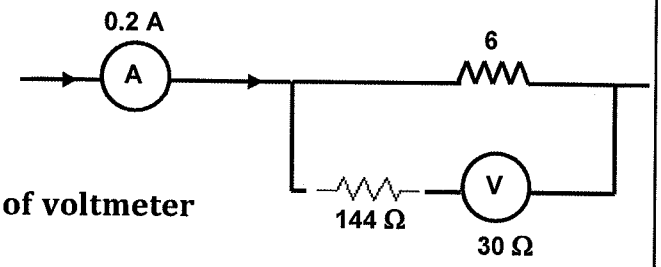

In this case the reading < max reading of voltmeter

$\because R_m = \frac{V - V_g}{I_g}$ $\quad \therefore 144 = \frac{V-1}{1/30}$ $\quad \therefore V = 5.8$ Volts

---

19. An ammeter of resistance 30Ω gives full scale deflection if a current of 0.01A passes in it, if it is required to modified it into an ohmmeter, what is the value of standard resistance should be used given that the e.m.f of the cell if 1.5 volts, what is the value of the resistance which when measured by this meter makes its pointer deflect to the graduation of 0.005A?

$R_g = 30\ \Omega$ $\qquad R_S = ???$

$I_g = 0.01$ A $\qquad R_X = ???$

$V_B = 1.5$ Volt

$I = 0.005$ A

Solution

$\because I_g = \frac{V_B}{R_{device}}$ $\quad \therefore 0.01 = \frac{1.5}{R_{device}}$ $\quad \therefore R_{device} = 150\ \Omega$

$\because R_{device} = R_g + R_s$ $\quad \because R_S = 150 - 30 = 120\ \Omega$

$\because I = \frac{V_B}{R_{device} + R_X}$ $\quad \therefore 0.005 = \frac{1.5}{R_{device} + R_X}$ $\quad \therefore R_{device} + R_X = 300\ \Omega$

$\therefore R_X = 300 - 150 = 150\ \Omega$

---

20. A galvanometer of resistance 11.8 Ω gives full scale deflection when passing a current of 0.02A, it is required to use it as an ohmmeter what is the value of the standard resistance to be connected to the internal coil given that the e.m.f of the cell is 2.4V and its internal resistance is 0.2 Ω, what is the value of the resistance which makes the pointer deflects to $^1/_4$ of the graduation?

$R_g = 11.8\ \Omega$ $\qquad R_S = ???$

$I_g = 0.02$ A $\qquad R_X = ???$

$V_B = 2.4$ Volt , $r = 0.2\ \Omega$

$I = \frac{1}{4} I_g$

Solution

$\because I_g = \frac{V_B}{R_{device}}$ $\therefore 0.02 = \frac{2.4}{R_{device}}$ $\therefore R_{device} = 120\,\Omega$

$\because R_{device} = R_g + R_s + r$ $\because R_S = 120 - 11.8 - 0.2 = 108\ \Omega$

$\because I = \frac{V_B}{R_{device} + R_X}$ $\therefore \frac{1}{4} \times 0.02 = \frac{2.4}{R_{device} + R_X}$

$\therefore R_{device} + R_X = 480\,\Omega$ $\therefore R_X = 400 - 120 = 360\ \Omega$

---

21. A galvanometer of resistance 50Ω , gives full scale deflection when passing a current of 0.02A, it is required to modify it into an ohmmeter by connecting it to a cell of e.m.f. 1.5v, calculate:

a. The standard resistance.
b. The resistance which makes the pointer reflects to $^1/_4$ of the graduation.
c. The external which makes the pointer reflects to $^1/_2$ of the graduation.
d. The external which makes the pointer reflects to $^3/_4$ of the graduation.
e. The external which makes the pointer reflects to full scale deflection.

$R_g = 50\ \Omega$ $R_S = ???$
$I_g = 0.02$ A $R_X = ???$
$V_B = 1.5$ Volt

Solution

a. $\because I_g = \frac{V_B}{R_{device}}$ $\therefore 0.02 = \frac{1.5}{R_{device}}$ $\therefore R_{device} = 75\,\Omega$

$\because R_{device} = R_g + R_s$ $\because R_S = 75 - 50 = 25\ \Omega$

b. $\because I = \frac{1}{4} I_g$

$\because I = \frac{V_B}{R_{device} + R_X}$ $\therefore \frac{1}{4} \times 0.02 = \frac{1.5}{R_{device} + R_X}$

$\therefore R_{device} + R_X = 300\,\Omega$ $\therefore R_X = 300 - 75 = 225\ \Omega$

c. $\because I = \frac{1}{2} I_g$

$\because I = \frac{V_B}{R_{device} + R_X}$ $\therefore \frac{1}{2} \times 0.02 = \frac{1.5}{R_{device} + R_X}$

$\therefore R_{device} + R_X = 150\,\Omega$ $\therefore R_X = 150 - 75 = 75\ \Omega$

d. $\because I = \frac{3}{4} I_g$

$\because I = \frac{V_B}{R_{device} + R_X}$ $\therefore \frac{3}{4} \times 0.02 = \frac{1.5}{R_{device} + R_X}$

$\therefore R_{device} + R_X = 100\,\Omega$ $\therefore R_X = 100 - 75 = 25\ \Omega$

e. $\therefore R_X =$ Zero

What is meant by each of the following?

1. Magnetic flux lines cutting an area = 10 Webers
   The total number of magnetic flux lines cutting normally this area = 10 wb.
2. Magnetic permeability of medium (μ)
   It is the ability of medium to allow magnetic flux propagate through it.
3. Magnetic flux density at a point = 0.3 Wb/m^2
   0.3Wb is the total number of magnetic flux lines passing normally through unit area surrounding this point.
4. Magnetic flux density = 0.3 N/A.m
   0.3N is the force acting on a straight wire of length 1 meter carrying current of 1 ampere when placed normal to this magnetic field.
5. Magnetic flux density = 0.3 Tesla
   0.3 Wb is the total number of magnetic flux lines passing normally through unit area surrounding this point.
   OR: 0.3 N is the force acting on a straight wire of length 1 meter carrying current of one ampere and placed normal to this magnetic field.
6. Magnetic dipole moment = 0.7 N.m/T
   This meant that the torque acting on a coil carrying current when it is placed parallel to a uniform magnetic field of density 1 Tesla equals 0.7 N.m
7. Sensitivity of galvanometer = 60 degree /μA
   The galvanometer pointer deflects 60 degrees when a current of intensity 1 μA passes through it.
8. Sensitivity of galvanometer = 5 division /μA
   The galvanometer pointer deflects 5 divisions when a current of intensity 1 μA passes through it
9. Sensitivity of galvanometer =60 μA /division
   The pointer of the galvanometer deflects by 1 division when a current of intensity 60 μA passes through it.
10. Sensitivity of ammeter = 0.1
    The ratio between the current intensity can be measured by the galvanometer before connecting shunt to the current intensity can be measured after connecting shunt = 0.1
11. Sensitivity of voltmeter = 0.04
    The ratio between the potential difference can be measured by the galvanometer before connecting multiplier to the potential difference can be measured after connecting multiplier = 0.04
12. Multi-meters
    Instruments can be used for measuring electric current intensity, voltage and resistance
13. DC multi-meters
    They are instruments measure direct voltage or direct current.
14. AC multi-meters
    They are instruments measure alternating voltage or alternating current.

Give reasons for each of the following:

1. Attraction of two parallel conductors carrying currents in the same direction.

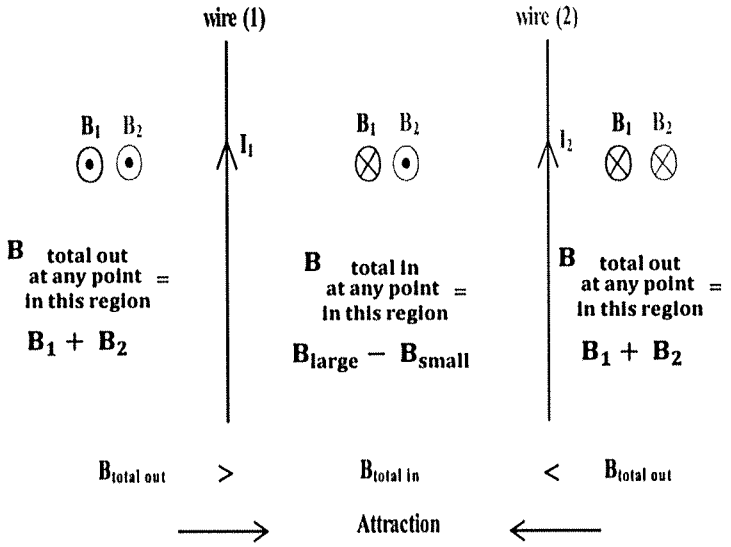

OR

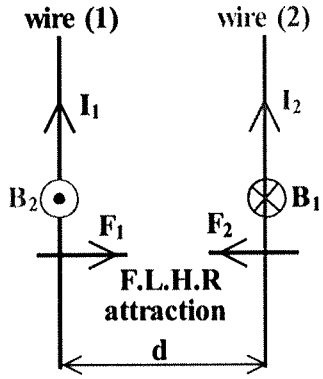

$F_1 = L_1 I_1 B_2$ $\quad$ $F_2 = L_2 I_2 B_1$

$F_1 = \frac{\mu}{2\pi} I_1 I_2 \frac{L_1}{d}$ $\quad$ $F_2 = \frac{\mu}{2\pi} I_1 I_2 \frac{L_2}{d}$

2. The repulsion of two parallel conductors carrying currents in opposite direction.

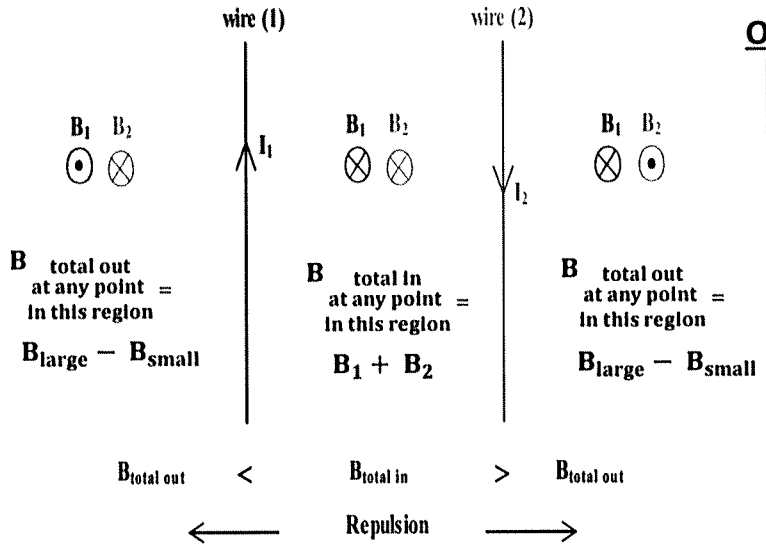

OR

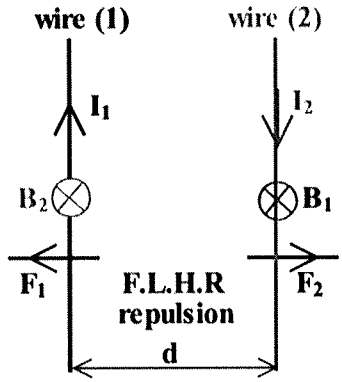

$F_1 = L_1 I_1 B_2$ $\quad$ $F_2 = L_2 I_2 B_1$

$F_1 = \frac{\mu}{2\pi} I_1 I_2 \frac{L_1}{d}$ $\quad$ $F_2 = \frac{\mu}{2\pi} I_1 I_2 \frac{L_2}{d}$

3. The formation of a neutral point between two parallel wires carrying currents in the same direction

Because in between them B_1 is opposite to B_2

And when $B_1 = B_2$ $\quad \therefore B_T = 0$

And at this point is a neutral point

$$\therefore \frac{\mu}{2\pi} \frac{I_1}{d_1} = \frac{\mu}{2\pi} \frac{I_2}{d_2} \quad , \quad \therefore \frac{I_1}{X} = \frac{I_2}{d - X}$$

And it is closer to the smaller current

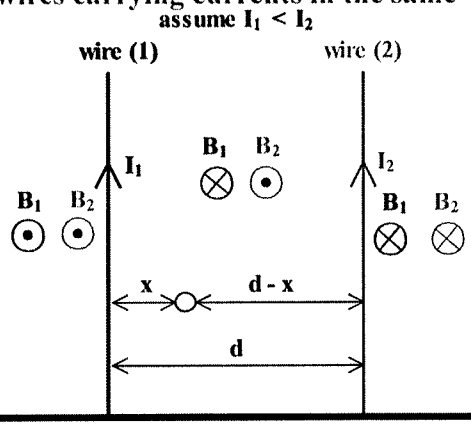

4. Two parallel wires are carrying currents at small distance apart but no neutral point is found.

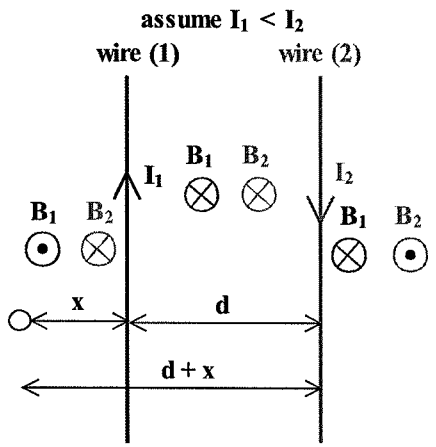

When the currents are equal in magnitude and opposite in direction

At neutral point: $\because B_T = 0 \quad \therefore B_1 = B_2$

$$\therefore \frac{\mu}{2\pi}\frac{I_1}{d_1} = \frac{\mu}{2\pi}\frac{I_2}{d_2}, \quad \therefore \frac{I_1}{X} = \frac{I_2}{d + X}$$

When $I_1 = I_2 \quad \therefore$ x never equal (d+x)

$\therefore$ In this case NO neutral point exists

5. It is advisable to live away from high voltage towers
To avoid the harmful effect of the magnetic field of the electric current in the wires as the magnetic flux density decreases as the distance between the point and the center of the wire increases ($B \propto \frac{1}{d}$), where $B = \frac{\mu}{2\pi}\frac{I}{d}$.

6. Although a conductor carrying current is placed in magnetic field it does not move.
Because the wire is placed parallel to the magnetic field
, So θ = zero sin θ = zero ,So $F = L\,I\,B\,\sin(0)$ = zero
Where Θ : is the angle between Magnetic Field & Wire (Current)

7. If an electric current passes in both a circular coil and straight wire located inside the coil with its axis along the axis of the coil, the straight wire will not be affected by any magnetic force.
Because at the center of the circular coil the magnetic field of it will be parallel to the straight wire carrying current, So $\theta = 0$, $\sin\theta = 0$ and $F_{st.\,wire} = L\,I\,B\,\sin(0)$ = zero

8. If an electric current flows through both a solenoid and a straight wire coinciding with the axis of the coil, there is no magnetic force acting on the wire.
Because the magnetic field of the solenoid form closed paths parallel to the axis inside the solenoid, so the wire parallel to the solenoid`s magnetic field, So $\theta = 0$, $\sin\theta = 0$ and $F_{st.\,wire} = L\,I\,B\,\sin(0)$ = zero

9. A circular coil or solenoid carrying currents, but magnetic field may not be produced.
Because the coil is double wounded where the current in one branch in opposite direction to the current in second branch, so the magnetic flux cancels each other.

10. Placing an iron core inside a solenoid carrying current increases magnetic flux density.
Because iron has high permeability, so it concentrates magnetic flux lines, so increase magnetic flux density.

11. Although a rectangular coil carrying current is placed in magnetic field, it doesn't move.
Because the coil's plane is placed normal to the magnetic field, so
$\theta = 0$ $\sin\theta = 0$, So $\tau = B\,I\,A\,N\,\sin(0)$ = zero
Where Θ is the angle between the normal to coil's plane and magnetic field.

12. The torque acting on a coil carrying currents and placed parallel in magnetic field is maximum.

Because when the coil's plane parallel to the magnetic field, so

$\theta = 90$ $\sin\theta = 1$, So $\tau = BIAN \sin(90) = BIAN = \tau_{max}$

Where Θ is the angle between the normal to coil's plane and magnetic field.

13. During the rotation of the coil carrying current between two poles of a magnet the coil may not stop at the normal position and continue rotation

Due to inertia

14. The existence of a soft iron cylinder and the two concave poles in all direct measuring instruments

<u>Soft iron:</u> Because iron has high permeability, so it concentrates magnetic flux lines, so increase magnetic flux density.

<u>Concave poles:</u>

To create a uniform radial constant magnetic field always parallel to the plane of the coil regardless the angle of rotation of the coil, so the torque is always of maximum value (τ_{max} = B I A N) and depends only on the value of current intensity regardless of the angle of rotation of the coil.

This ensures that the pointer deflection will be directly proportional only to the current in the coil.

15. The existence of the pair of spiral springs in the galvanometer.
    a. **Serve to in & out current to the coil.**
    b. **Create a mechanical torque that balances the magnetic torque.**
    c. **Return back the coil and pointer to zero position when electric current is cut off.**
16. Presence of the jeweled bearings in the galvanometer.

    To minimize the friction with the axis of the coil during the rotation, so the sensitivity of the galvanometer increases.
17. Galvanometer scale has equal divisions.

    Because the rotational angel (θ) is directly proportional only to the current intensity (I), $\theta \alpha I$
18. The moving coil galvanometer cannot be used in measuring high currents.

    Because:
    a. **The wire of the coil may melt due to the large heat energy resulting (heat energy αI^2)**
    b. **The two springs of the galvanometer may lose their elasticity.**
19. The moving coil galvanometer isn't suitable to measure A.C intensity .

    Because if the frequency is low, the pointer vibrates in two opposite directions and if the frequency is high, the pointer stops due to inertia.
20. It is necessary to calibrate the moving coil galvanometer from time to time.

    Because its magnet may lose some of its strength and springs may change its elasticity with time and use, so it causes errors.

21. The galvanometer should be connected with small shunt resistance to obtain ammeter.
    a. To increase the range of measured current intensity.
    b. To decrease the ammeter equivalent resistance in order not to affect the measured current intensity in the main circuit after connecting the ammeter in series in the circuit, so decrease error in measurements.
    c. To protect the galvanometer from damage by passing most of the current through shunt.
22. The ammeter is a device connected in series in circuit.
    Because in series connection the current is constant, so to have the same current intensity in the circuit as in the ammeter, so the ammeter indicates the circuit current intensity.
23. The voltmeter is a device connected in parallel in circuit.
    Because in parallel connection the potential difference is constant, so to have the measured potential difference in the circuit equals to the potential difference across the voltmeter.
24. In the voltmeter a high multiplier resistance is connected in series with the moving coil galvanometer.
    a. To increase the range of measured potential difference.
    d. To increase the voltmeter equivalent resistance in order not to affect the measured potential difference in the main circuit after connecting the voltmeter in parallel in the circuit, so decrease error in measurements.
    b. To protect the galvanometer from damage by decreasing current passing through it.
25. Ohmmeter scale is not uniform.

$$I = \frac{V_B}{R_{device\ OR\ ohmmeter} + R_X} \quad , \quad R_{device\ OR\ ohmmeter} = R_g + R_{standard} + R_{variable} + r$$

    Because the current intensity (I) is inversely proportional to the total resistance of the circuit, not with the unknown resistance only.
26. Using rheostat in the ohmmeter
    To adjust full scale deflection current of galvanometer when the test terminals are connected together (short circuited, $R_x = 0$)
27. Using of the fixed resistance in the ohmmeter
    To decrease the current passing through the circuit to protect the galvanometer from damage because of high currents.
28. Using battery of fixed E.M.F in the ohmmeter

$$I = \frac{V_B}{R_{device\ OR\ ohmmeter} + R_X} = \frac{V_B}{R_{Total}}$$

    When V_B is constant $\therefore I \propto \frac{1}{R_{Total}}$, So the ohmmeter measures the external resistance directly
29. The scale of the ohmmeter is opposite to that of the ammeter.

$$I = \frac{V_B}{R_{device\ OR\ ohmmeter} + R_X} = \frac{V_B}{R_{Total}}$$

    Because at constant V_B: $\therefore I \propto \frac{1}{R_{Total}}$

Write down the mathematical formula which represented by this graphs and what does the slope mean:

Graph	Mathematical formula	Slope means
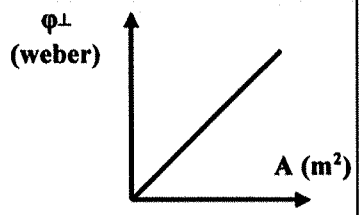	$B = \frac{\varphi_{\perp}}{A}$	Slope $= \frac{\varphi_{\perp}}{A} = B$
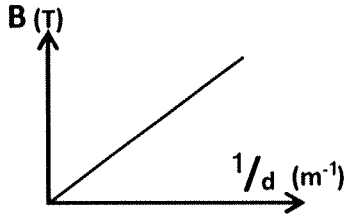	$B = \frac{\mu}{2\pi}\frac{I}{d}$	Slope $= \frac{B}{1/d} = B\,d = \frac{\mu}{2\pi} I$
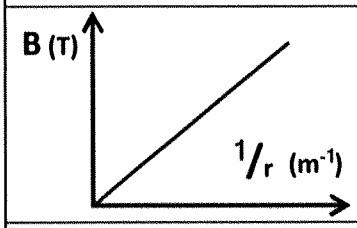	$B = \frac{\mu}{2}\frac{N\,I}{r}$	Slope $= \frac{B}{1/r} = B\,r = \frac{\mu}{2} N\,I$
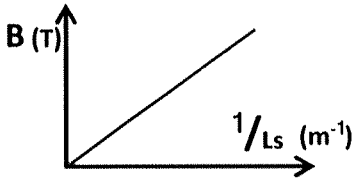	$B = \mu\frac{N\,I}{L_s}$	Slope $= \frac{B}{1/L_s} = B\,L_s = \mu\,N\,I$
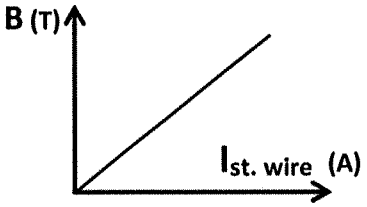	$B = \frac{\mu}{2\pi}\frac{I}{d}$	Slope $= \frac{B}{I} = \frac{\mu}{2\pi\,d}$
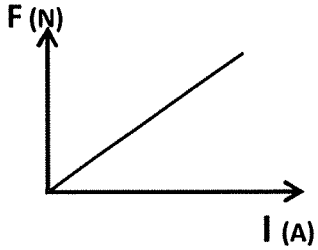	$F = L\,I\,B\,\mathrm{Sin}(\theta)$	Slope $= \frac{F}{I} = L\,B\,\mathrm{Sin}(\theta)$

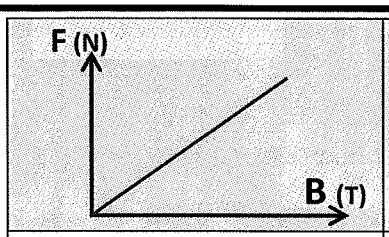	$F = L\,I\,B\,\mathrm{Sin}(\theta)$	$\text{Slope} = \frac{F}{B} = L\,I\,\mathrm{Sin}(\theta)$
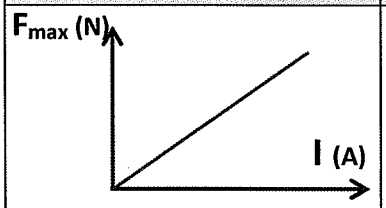	$F_{max} = L\,I\,B$	$\text{Slope} = \frac{F_{max}}{I} = L\,B$
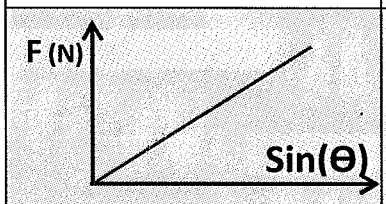	$F = L\,I\,B\,\mathrm{Sin}(\theta)$	$\text{Slope} = \frac{F}{\mathrm{Sin}(\theta)} = L\,I\,B$
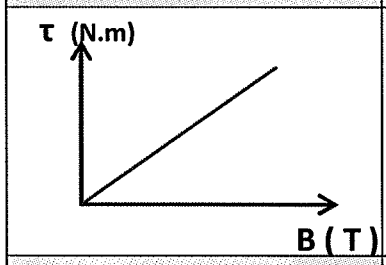	$\tau = B\,I\,A\,N\,\mathrm{Sin}(\theta)$	$\text{Slope} = \frac{\tau}{B} = I\,A\,N\,\mathrm{Sin}(\theta)$
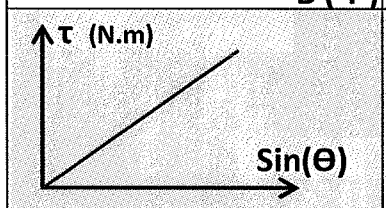	$\tau = B\,I\,A\,N\,\mathrm{Sin}(\theta)$	$\text{Slope} = \frac{\tau}{\mathrm{Sin}(\theta)} = B\,I\,A\,N$
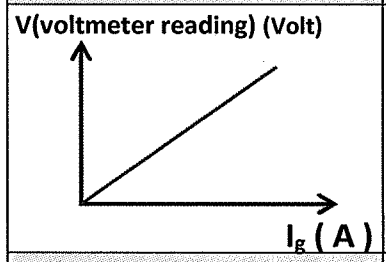	$V = I_g\,(R_g + R_m)$	$\text{Slope} = \frac{V}{I_g} = R_g + R_m$
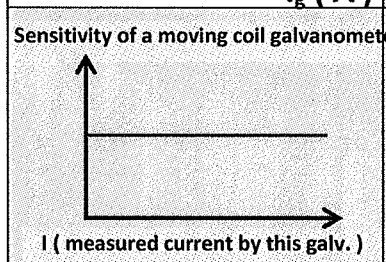	$\text{Sensitivity} = \frac{\theta}{I}$	$\text{Slope} = \text{Zero}$

Remarks & Notes